Brought to you by Pro Gear & Transmission courtesy of Parker Hannifin Chelsea PTO

For parts or service contact us, Pro Gear & Transmission, Inc. parts@eprogear.com

Understanding

Power Take-Offs

CHELSEA® Parker

Contents

What is a Power Take-Off?
The various types, what they do and the benefits of each 1

P.T.O. Operation
How P.T.O.s work, gears, gear pitch and gear ratio 4

P.T.O. Types and Arrangements Review Exercise 6

How to Specify a P.T.O.
Information necessary to understand proper specification 7

Specifying a P.T.O. Review Exercise 10

Installation and Conversion of P.T.O.s
Explanation of installation of Side-mount and Countershaft P.T.O.s, driveshafts and conversions 11

Installation and Conversion of P.T.O.s Review Exercise 17

P.T.O. Troubleshooting
Review Exercise 22

Glossary of Power Take-Off Terms 23

Glossary and Abbreviations 24

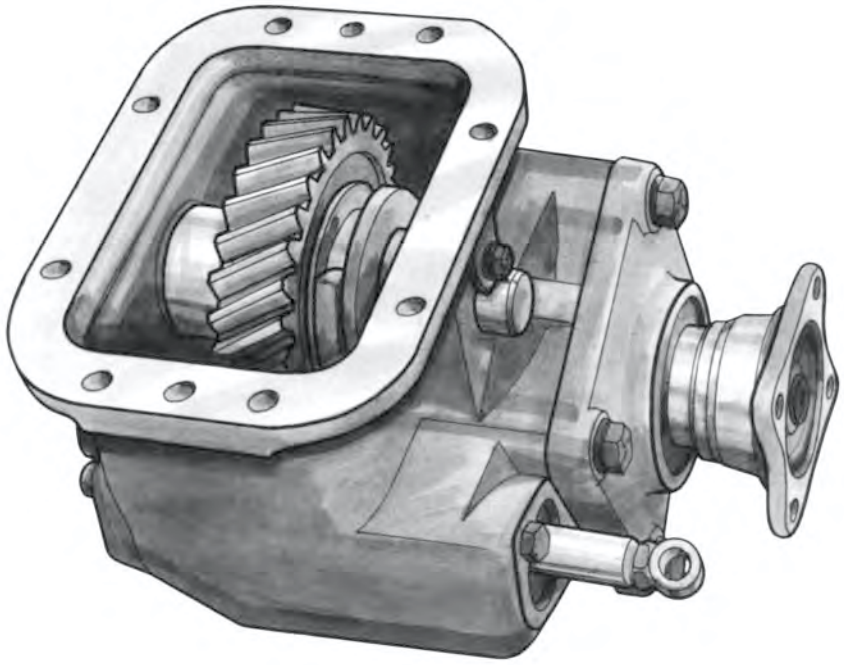

Parker Hannifin Corporation
Chelsea Products Division
Olive Branch, MS 38654 USA

Parker Hannifin Corporation
Chelsea Products Division
Olive Branch, MS 38654 USA

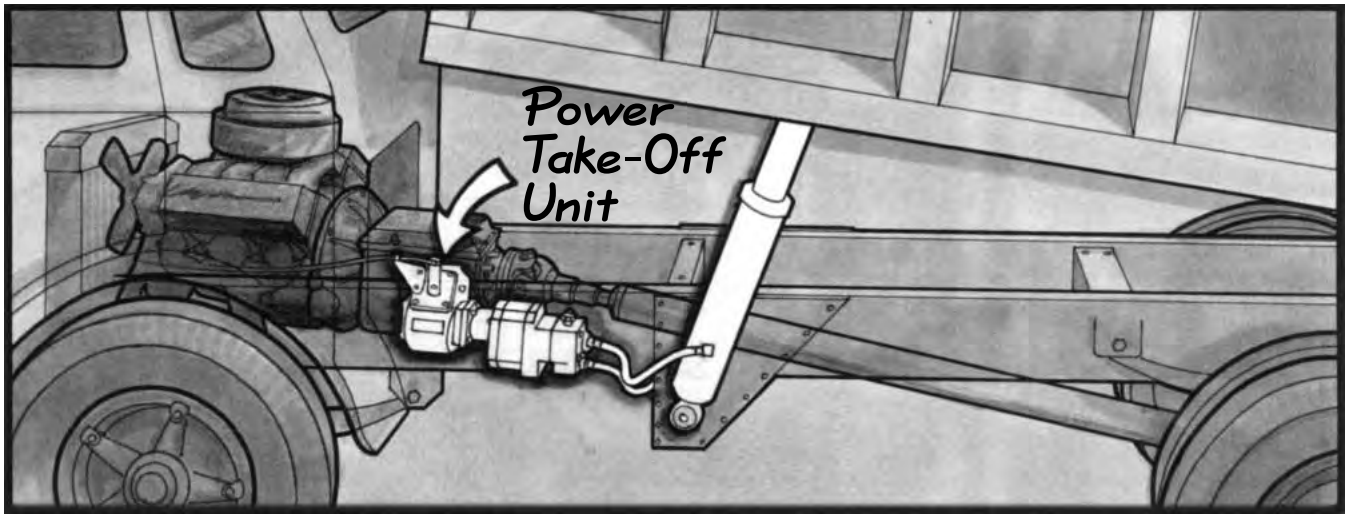

A Power Take-Off, or P.T.O. gives a truck versatility beyond its usual function of providing transportation for materials. It directs power to the auxiliary equipment to perform work at the site and/or enroute.

Why use a P.T.O.? Who wants to unload a truck by the shovel method? Who wants to operate a snow plow blade by a hand-powered winch? How could we pack trash in the garbage truck? Who would consider using a permanent scaffold on a truck bed for aerial jobs? A P.T.O. makes it possible to utilize all or a portion of the truck's engine power to do these and many more tasks.

A P.T.O. increases a truck's efficiency by allowing it to unload faster and, thus, make more trips per any given unit of time. It can also give mobility to equipment needed for relatively short periods at different locations such as the post hole digger, cable stringer, etc. A P.T.O. eliminates the need for a second, or auxiliary, engine to power the equipment. The P.T.O.s simple design and rugged construction makes it cost-efficient and trouble-free. It requires no special cooling system, has no ignition system, nor requires other routine engine maintenance. The relatively smaller size and greater mounting adaptability of the P.T.O. affords more space efficiency when compared to a more bulky auxiliary engine that requires valuable truck bed space and location arrangement. Both the initial investment and operating costs for a P.T.O. are much lower than an auxiliary engine. These advantages make the P.T.O. the single most popular auxiliary add-on for new trucks.

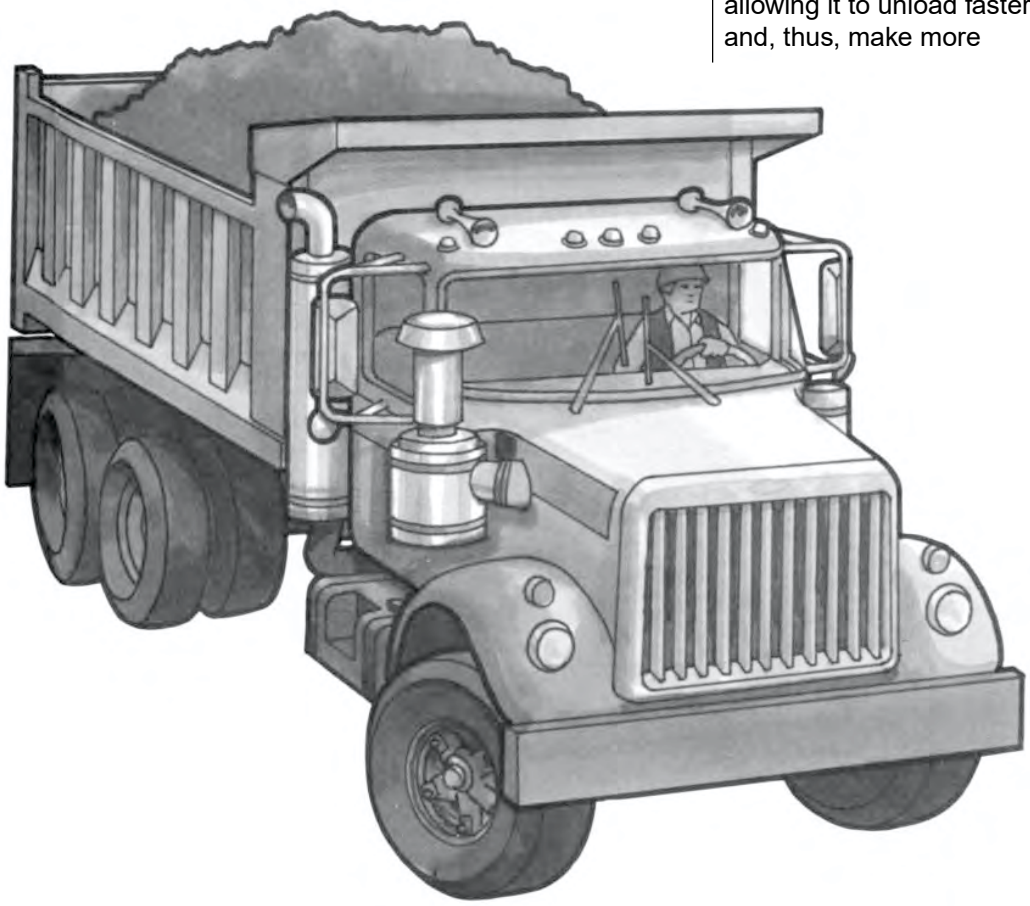

Parker Hannifin Corporation
Chelsea Products Division
Olive Branch, MS 38654 USA

What is a Power Take-Off

P.T.O.s come in various types and sizes which are necessary because of the many different functions P.T.O.s perform. Also, there are no standard types of heavy-duty trucks or truck transmissions. Because vehicle manufacturers do not always know the ultimate use of their products, their transmissions are usually specified only for a certain type of use. This use is likely to change several times during the life span of the vehicle, therefore different types of P.T.O.s are needed to meet changing power and/or speed requirements. For example, a truck chassis for a refuse truck usually needs a different type of P.T.O. than one with a wrecker body.

There are six basic types of P.T.O.s

- **Side Mount**
- **Split Shaft**
- **Top Mount**
- **Countershaft**
- **Crankshaft-Driven**
- **Flywheel**

The **Side Mount** P.T.O. is attached to the side of the main transmission, or auxiliary transmission. This is the most common P.T.O. in use and may be available for mounting to the side of the transmission with either an S.A.E. standard six or eight-bolt opening. When referring to left-side or right-side mounting, always view the transmission from the driver's seat, rather than from the front of the vehicle.

The **Split Shaft** P.T.O. is designed to transmit engine power and torque from the driveshaft. It is attached within the vehicles drivetrain, behind the transmission, and requires special mounting to the chassis frame.

Top Mount P.T.O.s are designed to operate from, and are attached to, the top of the auxiliary transmission. They are used in heavy-duty applications. Each unit is designed to function with a specific auxiliary. Also, since it is attached to the top of the auxiliary, it must also provide shifting capabilities for both the transmission and the P.T.O.

Countershaft P.T.O.s are mounted behind certain transmissions and replace the normal bearing cap at the rear of the countershaft. This concept has long been used on some European truck transmissions and is available now on certain American-built twin countershaft transmissions.

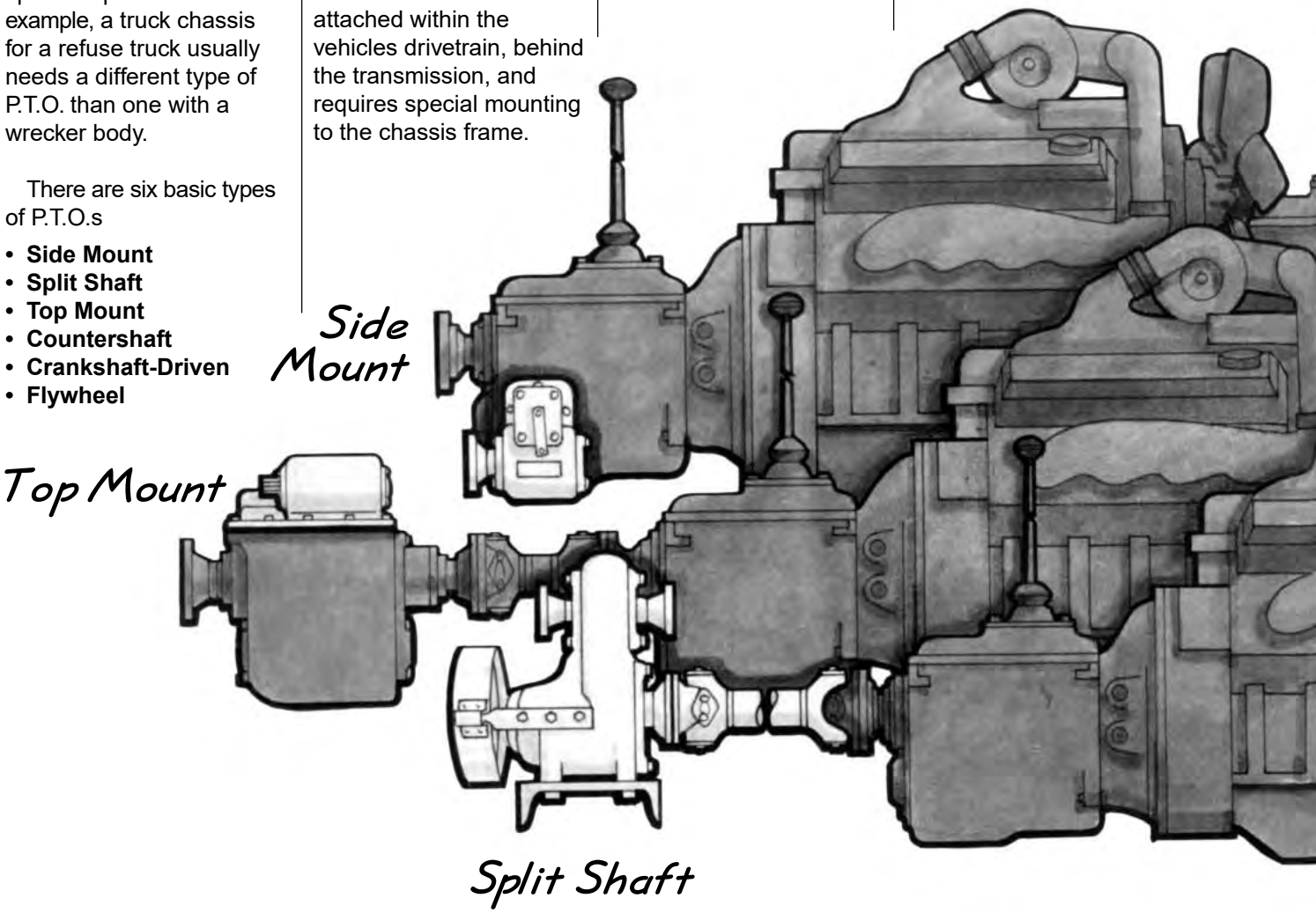

Parker Hannifin Corporation
Chelsea Products Division
Olive Branch, MS 38654 USA

These models are mounted to a splined countershaft extension on the rear of certain transmissions and are engaged through the use of an air-actuated clutch collar.

One benefit of the Countershaft P.T.O. is that there are no meshing input gears and, consequently, no need to adjust backlash. The gear-type countershaft P.T.O.s have factory adjusted backlash between the internal gears.

Crankshaft-Driven P.T.O.s are driven by the front of the engine crankshaft. They are used in heavy-duty and extra-heavy-duty applications that require auxiliary power while the vehicle is in motion. (Side Mounted P.T.O.s could cause premature failure of the synchronizers in a transmission if the P.T.O. were in operation during the shifting of gears.) A clutch-type Crankshaft-Driven P.T.O. is preferable since it can be engaged without shutting off the engine. A mechanical shift can be used as long as the engine is shut off when engaging or disengaging the crankshaft unit.

Flywheel P.T.O.s are "sandwiched" between the bellhousing and the transmission. Most allow full engine torque for intermittent operation. No disconnect is normally provided since they run directly off the engine flywheel with no way to stop rotation except to turn off the engine. They must be "designed in" by engine and transmission manufacturers and are seldom, if ever, retrofitted in the field.

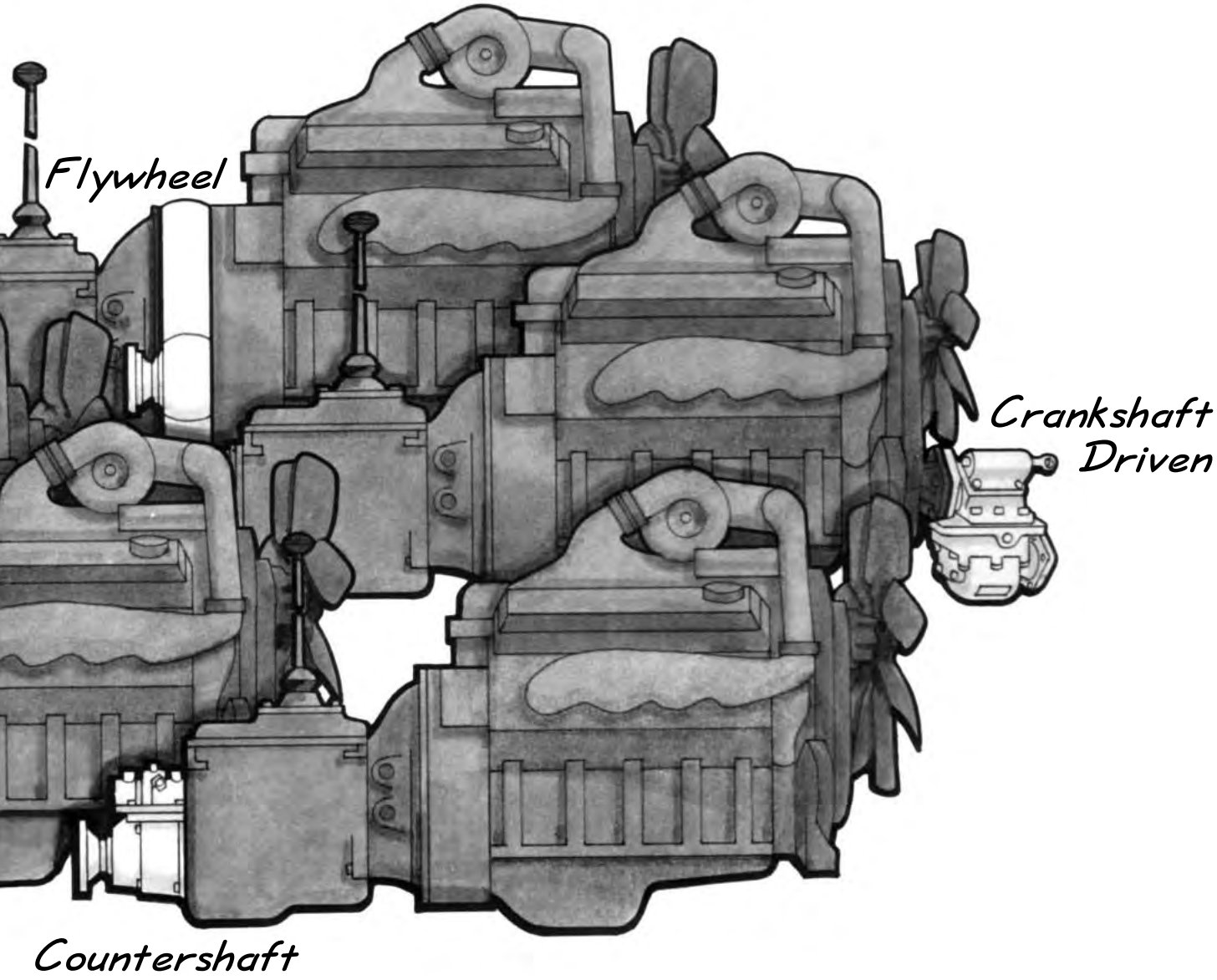

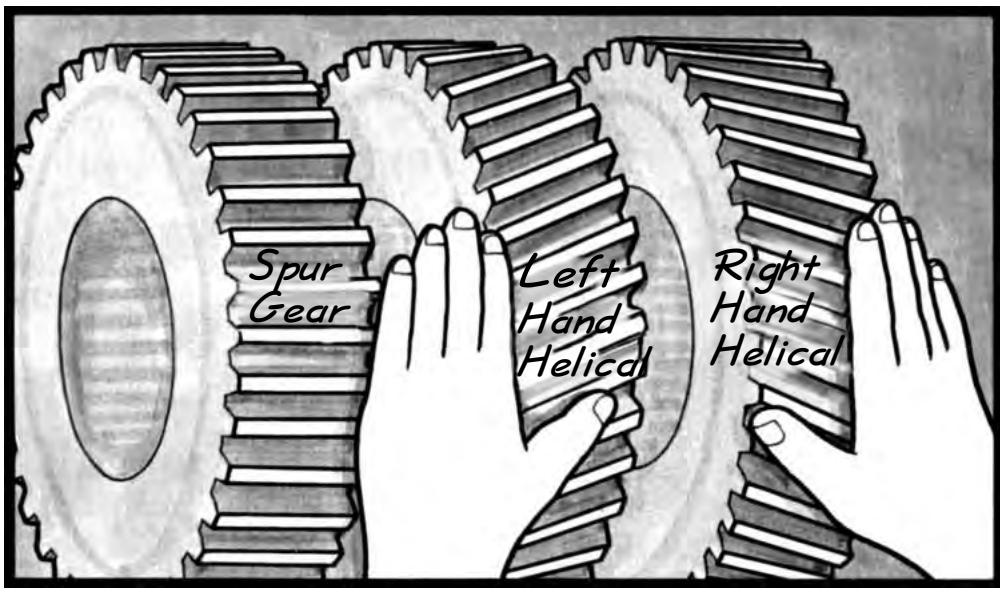

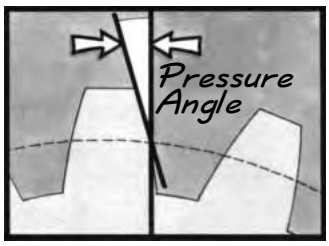

The typical P.T.O. is designed to pick up engine power, through rotation, and transfer it to another piece of equipment. This is done either by mounting the equipment directly to the P.T.O. or by connecting the equipment with a small driveshaft. The P.T.O. input gear meshes with one of the gears in the vehicle's transmission. The rotation developed by the engine drives the transmission, which turns the P.T.O. gear, and rotates the P.T.O. output shaft.

The most important part of a P.T.O. is the gear, or gear set. Rotation is picked up by gears meshing or mating with other gears, and in order for the P.T.O. to work, the gears must mesh properly with the transmission's P.T.O. drive gear. It is very important, therefore, to know the design and specifications of the gear teeth in the transmission.

In P.T.O.s two types of gears are used. There are spur gears and there are helical gears. On a spur gear, the teeth are cut straight across the gear parallel to the rotational axis. Helical gears have their teeth cut on an angle diagonally across the gear. This gives the gear teeth a slanted or twisted appearance.

Helical gears may have their teeth with a right-handed or left-handed slant. If you were to put the palm of your hand directly on the helical gear teeth, you could tell what type of gear you had. Right-handed helical gear teeth will slant up towards your right thumb, while left-handed helical gear teeth will slant in a line with your left thumb.

Obviously, a spur gear will not mesh properly with a helical gear. It will mesh only with other spur gears and only with those that have the same tooth construction. Helical gears not only must mesh with each other, but one must be right-handed and the other must be left-handed. If they are not matched, they will clash. Helical gears also must have the same tooth construction in terms of pitch, pressure angle and helix angle. Helix angle is the degree of the angle cut across the gear.

The pressure angle of a gear is the angle formed by a line drawn perpendicular to the pitch diameter or the point midway between the base of the tooth and the tip of the tooth, and a line drawn tangent to the tooth profile at the pitch diameter. The pressure angle is important because gears with different pressure angles will not mate and will make a great deal of noise when meshing. Different pressure angles mean different gear tooth designs.

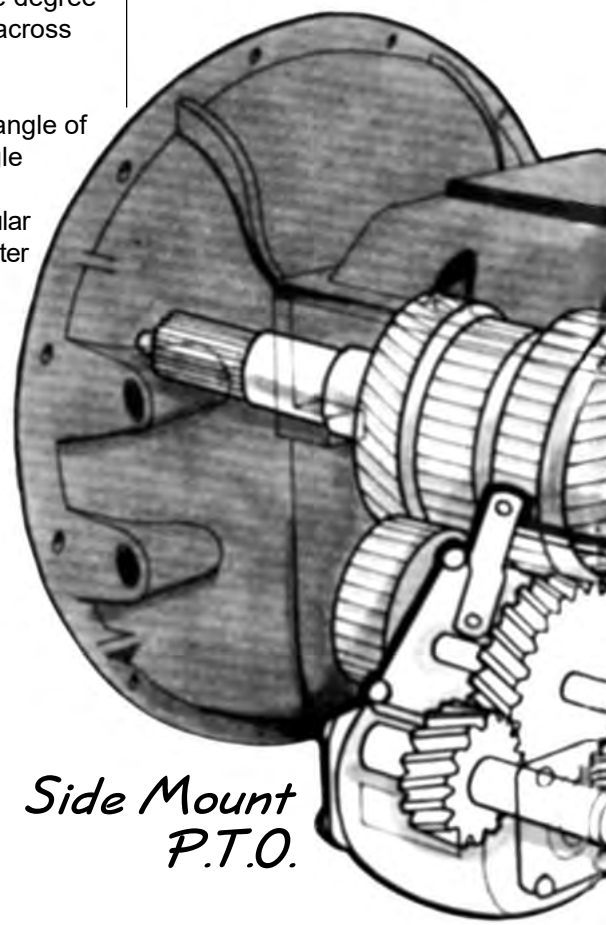

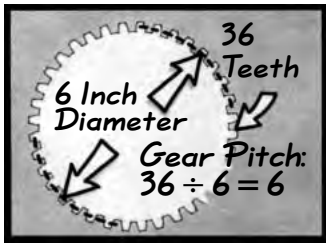

Gear pitch is the measure of the size of the teeth and is determined by the number of teeth in a given area. A simple way of determining gear pitch is to divide the number of teeth by the pitch diameter of the gear. Therefore, if a gear has thirty-six teeth and has a six inch pitch diameter, it has a gear pitch of six. Spur P.T.O. gears are normally identified as five, six or seven pitch gears. Gear pitch is vitally important since the P.T.O. gear must have the same pitch as the transmission gear in order to function properly.

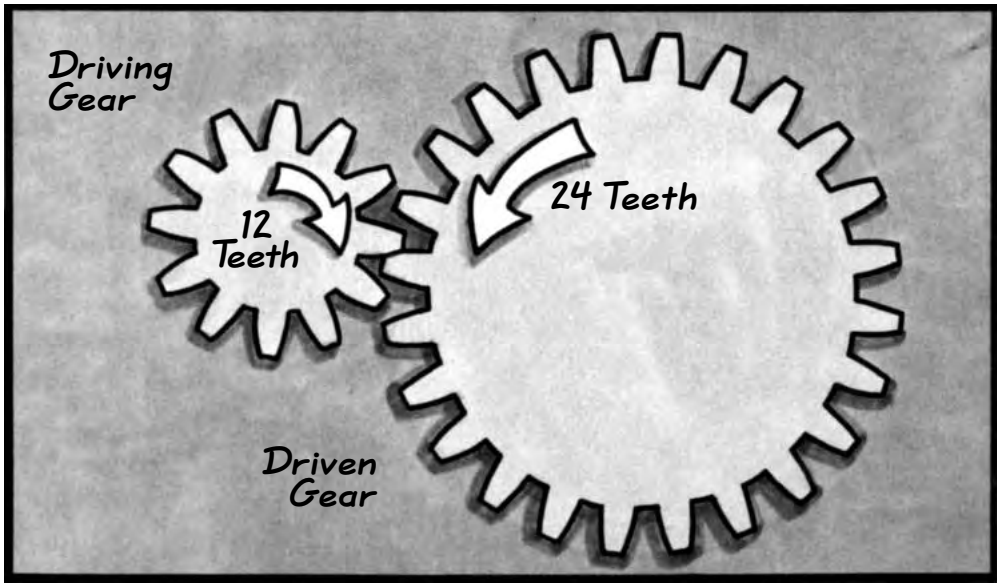

Gear ratio is another important part of P.T.O. operation. The P.T.O. gear ratio can actually modify the operating speed of the engine to the requirements of the P.T.O.-driven device. The proper P.T.O. model has the necessary torque capacity and operating speed that most clearly meets the needs of the application.

P.T.O. gear ratio is easy to understand. For example, when a small gear with twelve teeth drives a larger gear with twenty-four teeth, it makes one revolution while the other gear has turned only halfway. The speed of the larger gear is only half that of the smaller gear, and even though the speed of the larger gear is less, the torque or twisting force is twice that of the smaller gear.

The gear ratio is determined by dividing the number of teeth in the driven gear by the number of teeth in the driving gear (24 ÷ 12 for a gear ratio of 2 to 1).

Although the gear ratio in the example given is 2 to 1, the change in torque is 1 to 2. This is arrived at by dividing the number of teeth in the driven gear: 12 ÷ 24 = 1 to 2. Assume the engine horsepower is 50 and the speed of the small gear is 1000 revolutions per minute (R.P.M.). The formula for determining torque is:

$$T = \frac{\text{Horsepower} \times 5252}{\text{Speed (R.P.M.)}} \text{ or}$$

$$\frac{50 \times 5252}{1000} = 262.6 \text{ lbs.ft. Torque}$$

The larger gear turned only half as fast as the small gear. To measure its torque:

$$\frac{50 \times 5252}{500} = 525.2 \text{ lbs.ft. Torque}$$

or twice that of the small gear.

If however, the situation was reversed with the larger gear driving the smaller gear, the small gear would rotate twice as fast as the larger gear, but the torque would rotate twice as fast as the larger gear, but the torque would only be half as great.

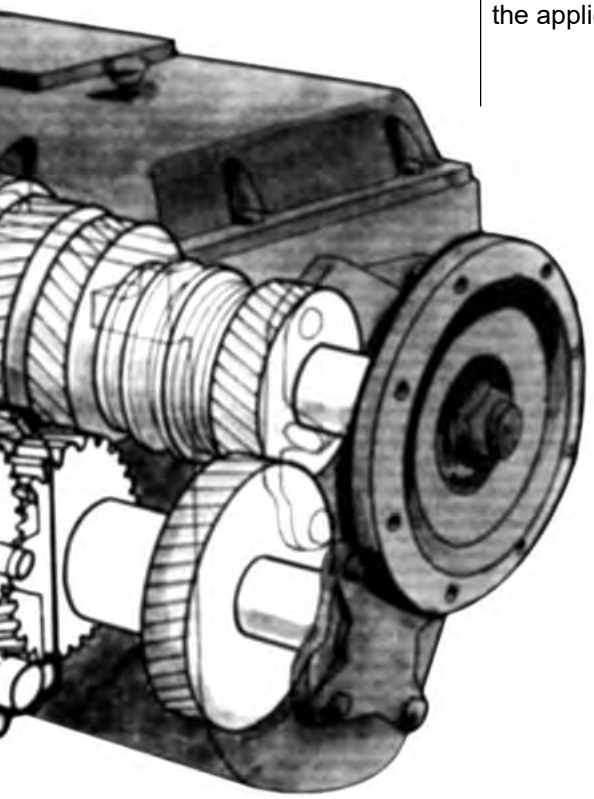

Parker Hannifin Corporation
Chelsea Products Division
Olive Branch, MS 38654 USA

True or False

____ 1. The three basic parts of a P.T.O. are the case, shaft, and gears.

____ 2. The two types of gears that can be found in P.T.O.s are spur and helical gears.

____ 3. A helical gear has teeth that are cut straight across the gear parallel to the rotation axis.

____ 4. There are two types of helical gears ... right and left-handed.

____ 5. A right-handed helical gear in a P.T.O. will only mesh with the other right-handed gears.

____ 6. Gear tooth construction is important because most P.T.O.s are purchased to match the reverse gear of transmissions.

____ 7. For gears to mesh properly, they should be the same pitch, size and type.

____ 8. Torque is the twisting power or force necessary to overcome resistance.

____ 9. If the horsepower is constant, the more R.P.M.s a P.T.O. shaft turns the greater the torque will be.

____ 10. In a heavy-duty application, where full engine power is required, a top mount P.T.O. should be used.

____ 11. A P.T.O. may require a different assembly arrangement to clear the chassis or frame, and to improve P.T.O. shaft alignment.

____ 12. The benefit of the Chelsea Countershaft P.T.O. is that there are no meshing input gears and, consequently, no backlash to adjust.

____ 13. All P.T.O. gears are in constant mesh with the transmission output gear.

____ 14. The most common P.T.O. in America is the Countershaft P.T.O.

____ 15. The P.T.O. gear ratio will modify the output speed of the engine to the requirement of the driven device.

____ 16. A P.T.O. will not increase a vehicle's horsepower.

____ 17. If a gear has 35 teeth and a diameter of 5 inches, then its pitch is 5.

____ 18. If a small gear has 15 teeth and drives a gear with 45 teeth, then the gear ratio is 3:1.

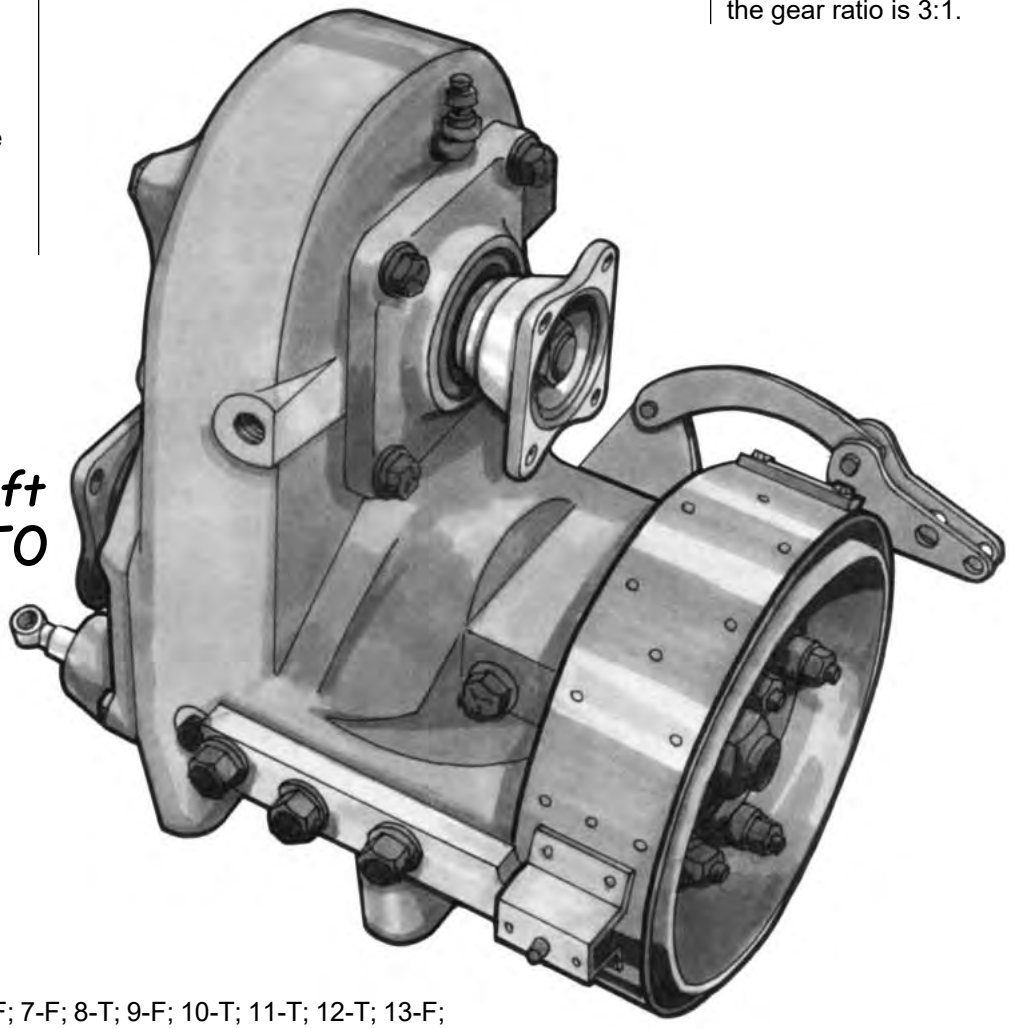

Split Shaft PTO

Answers:
1-T; 2-T; 3-F; 4-T; 5-F; 6-F; 7-F; 8-T; 9-F; 10-T; 11-T; 12-T; 13-F; 14-F; 15-T; 16-T; 17-F; 18-T.

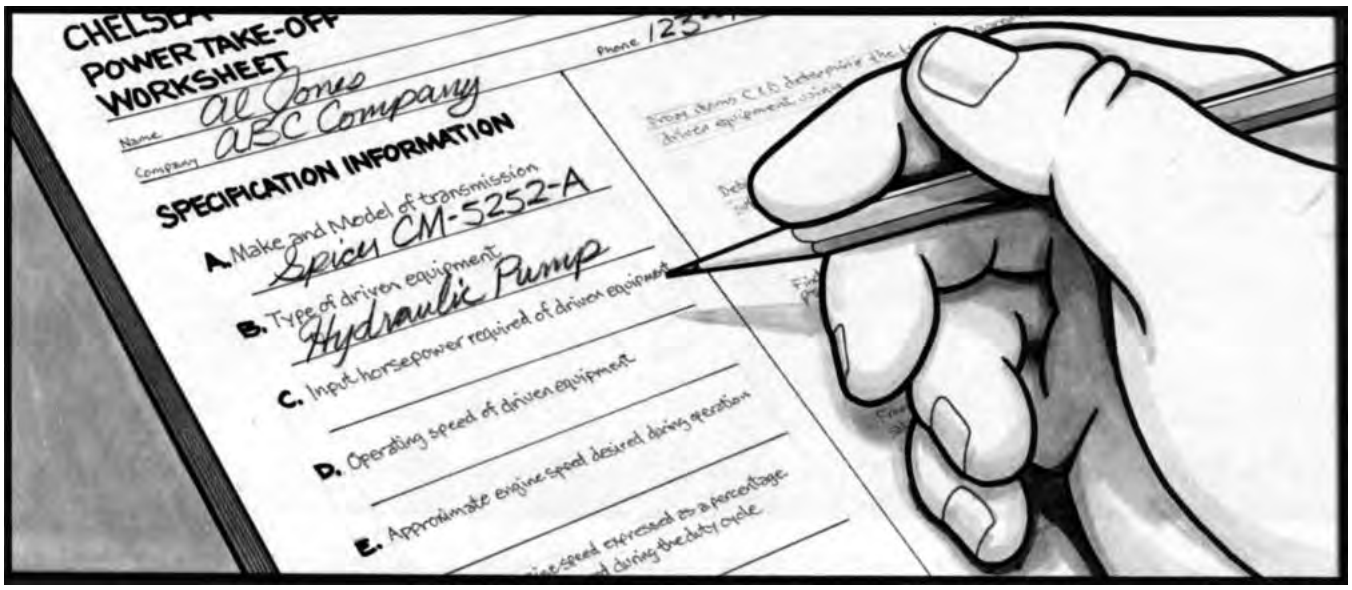

If all vehicles were created and designed equally, there would be no problem in selecting the correct P.T.O. You could simply ask for one. But have you ever gone into a hardware store and just asked for a hammer? You know how the salesman probably responded? " 'What are you going to use it for?' 'What weight do you want?' 'Do you want a tempered, forged or cast head?' 'Fiberglass or wooded handle?' " Selection of a P.T.O. requires the same kind of job analysis but is somewhat more detailed and technical.

A P.T.O. must be able to transmit a sufficient amount of power to some other driven equipment. To accomplish this, P.T.O.s are available in many sizes and with various capabilities to meet output requirements. They range from light-duty, one-speed, single-gear units to extra-heavy-duty units, units with reverse operation, and even those with two speeds forward and one reverse.

To begin analyzing any P.T.O. application, you need to determine the necessary technical information about its work and the installation requirements. A P.T.O. application sheet will help you organize your information and make this task much easier.

The form first calls for determining the make and model of transmission being used. The information is available from the identification tag found located on most transmission cases.

The second step, after you have the transmission make and model, is to refer to the **Chelsea® Applications Catalog** for a listing of the P.T.O.s that will fit your particular transmission. Next a number of questions need to be answered concerning the particulars of your P.T.O. application. . . . .

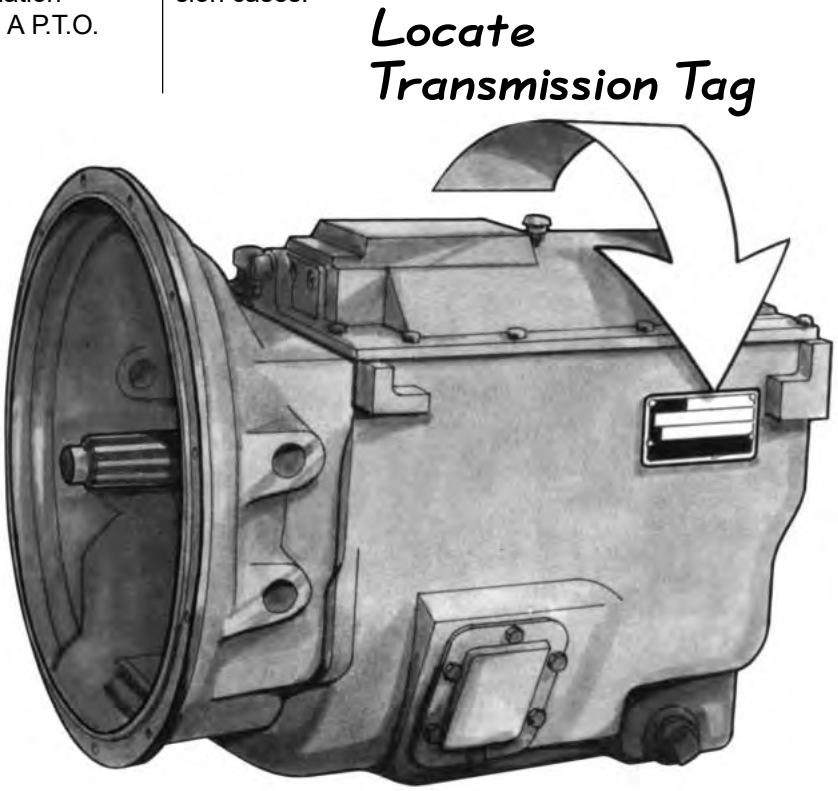

Parker Hannifin Corporation
Chelsea Products Division
Olive Branch, MS 38654 USA

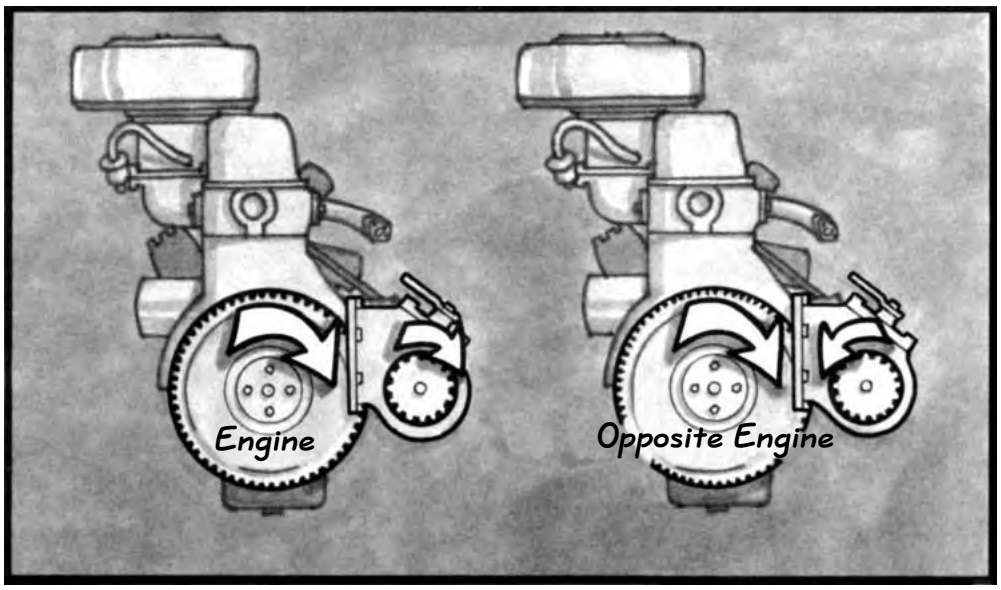

Chelsea® Catalog will help you find the actual type of R.P.M. that meets, or exceeds, the torque requirements of your particular application. Use the application page in matching the R.P.M.'s from this list with the speed and rotation requirements until the one that best fits the application is identified. Note the model number and necessary part numbers for any mounting parts that are listed along the same lines as the R.P.M. number. Then, determine what options are needed and change the R.P.M. part number prefixes and suffixes to reflect the correct options.

What type of equipment is to be driven by the P.T.O.? Is it a hydraulic pump? Is it a winch, or any other number of mechanical devices requiring power? The power requirements of the driven equipment should be provided by the manufacturer and should include the input horsepower necessary for proper operation.

The third step is to determine P.T.O. speed. This speed relationship is stated as a percentage of P.T.O. speed to engine speed. For example, if the required pump speed is 100 R.P.M., and the engine operating speed is 1500 R.P.M., the percentage of P.T.O. to engine speed is approximately two-thirds, or approximately 67 percent.

The fourth step is to determine which direction the P.T.O. is to turn. There are two choices: engine or opposite-engine. The requirements of the device being driven will determine what direction you choose.

Note: A rule of thumb for Allison transmissions (highway) is "P.T.O. rotation will be opposite that of the same type of P.T.O. when it is bolted to a manual transmission" because of a lack of a countershaft in the Allison's.

In the fifth step, the torque requirement for the P.T.O. is calculated by using the torque formula mentioned earlier:

$$\frac{\text{HP} \times 5252 = \text{lbs. ft. of Torque}}{\text{R.P.M.}}$$

plus data gathered from the customer. If the application is "continuous" (the P.T.O. is in operation more than five minutes out of every 15), the torque handling requirements of the P.T.O. must be increased. This increased torque requirement can be found by dividing the torque required by .7. For example, 140 lbs. ft. of torque divided by .7 equals 200 lbs. ft. of Torque

$$\left(\frac{140}{1} \div \frac{7}{10} = 200 \text{ lbs. ft.}\right)$$

This would be the increased torque requirement needed for continuous application in this example.

In the last step, the General Information section of the

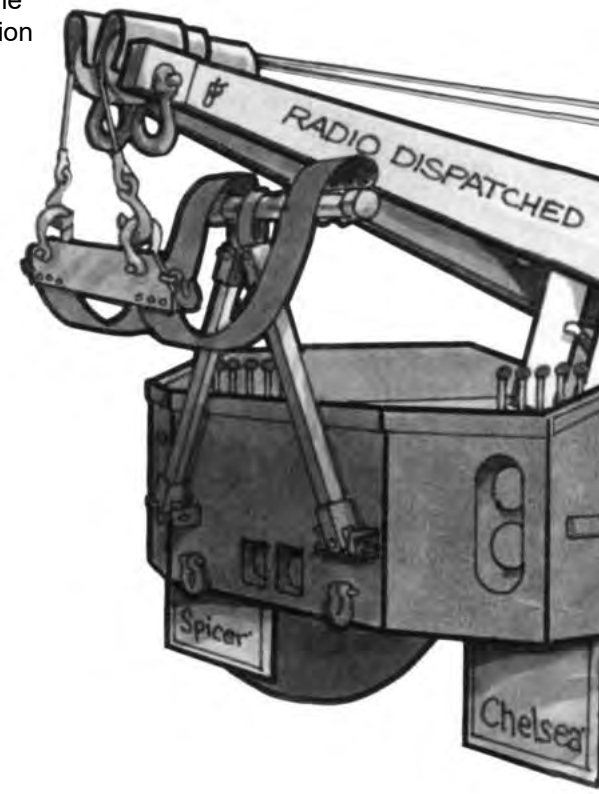

Parker Hannifin Corporation
Chelsea Products Division
Olive Branch, MS 38654 USA

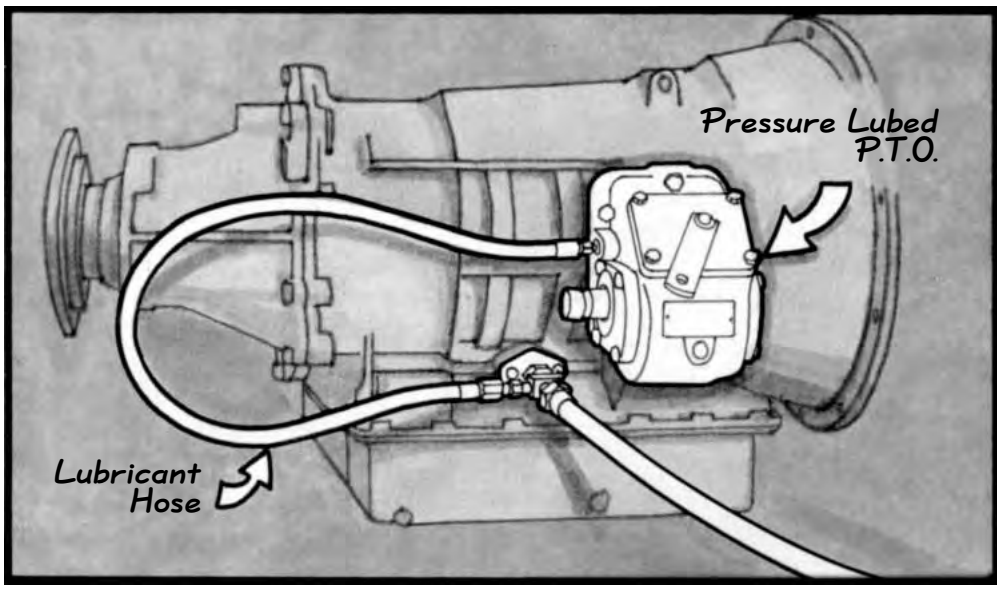

Automatic transmissions have special P.T.O. application considerations. The choice of units is qualified to those that have the capability of *pressure* lubrication. Power Take-Offs for automatic transmissions are assembled with a special, drilled idler shaft which allows the input gear bearings to be pressure-lubricated during operation. This is necessary because the oil in most automatic transmissions is not concentrated near the P.T.O. opening in enough quantity to effectively lube the P.T.O.s wearing parts. When a P.T.O. is applied to an automatic transmission, the pressure lubrication hose must be connected to the transmission's oil cooling line. Lubricant is then channelled directly to the critical wear points of the P.T.O. Adapter assemblies are never used on an automatic transmission because they do not have pressure-lubricated design features.

Once the proper P.T.O. part number has been selected, review the application and make sure that you have included all of the necessary information. When selecting any P.T.O. from the catalog, it is important to remember to read the footnotes. Some transmissions may not be able to withstand the torque capacity of the P.T.O. and its application or some other unique feature of the unit may be pointed out by the footnotes.

Proper application, many times can mean the difference between a long and productive life cycle with little or no downtime or a constant irritation with failures and frequent repairs. For additional application information, use the **Chelsea P.T.O. Applications and General Information Catalogs.** These catalogs should be read and completely understood before any application is started. They contain updated information and detailed instructions for specifying Chelsea units.

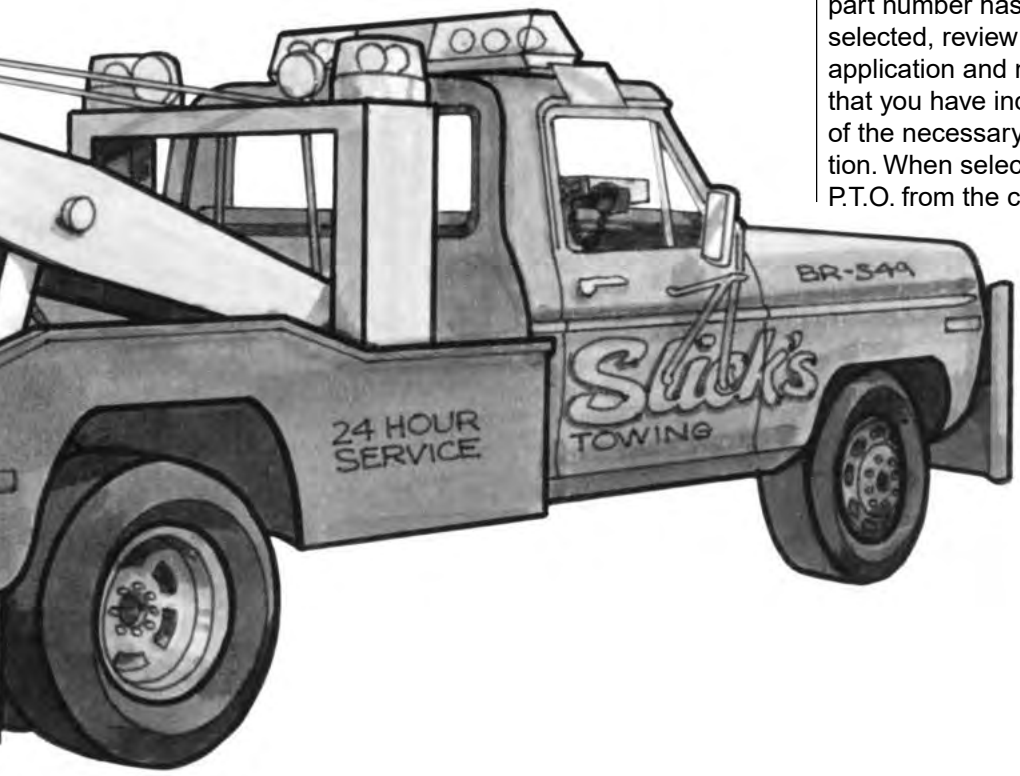

True or False

____ 1. A P.T.O. is selected to match a vehicle's transmission gears rather than its engine horsepower.

____ 2. For proper P.T.O. selection, it is important to know the horsepower requirement of the P.T.O.-operated equipment.

____ 3. If the P.T.O.s speed is 1000 R.P.M. and the engine speed is 1500 R.P.M., then the percentage of P.T.O. to engine speed is 75%.

____ 4. If a P.T.O. is in operation more than five minutes of every fifteen, then the torque handling capability of the P.T.O. must be increased.

____ 5. In a continuous duty application, to identify the increased torque handling requirement of a P.T.O. divide the torque required by .7.

____ 6. The direction of a P.T.O.s rotation will affect the torque rating.

____ 7. Only those P.T.O.s that have the capability for pressure lubrication can be specified for automatic transmissions.

____ 8. P.T.O. adapter assemblies can never be used on automatic transmissions because they do not have pressure-lubricated design features.

____ 9. Footnotes in Chelsea P.T.O. catalogs indicate a price change for particular units.

____ 10. The first step when specifying a P.T.O. is to ask whether a six-bolt or eight-bolt unit is needed.

____ 11. When specifying a P.T.O., it is a safe bet to specify units that meet or exceed the torque ratings required for the application.

____ 12. Any P.T.O. will accept the full power output of a transmission.

____ 13. To put a P.T.O. into reverse, simply shift the transmission into reverse.

____ 14. Air-operated control is not available for a single-gear P.T.O.

____ 15. Reverse speeds are available for most P.T.O. models.

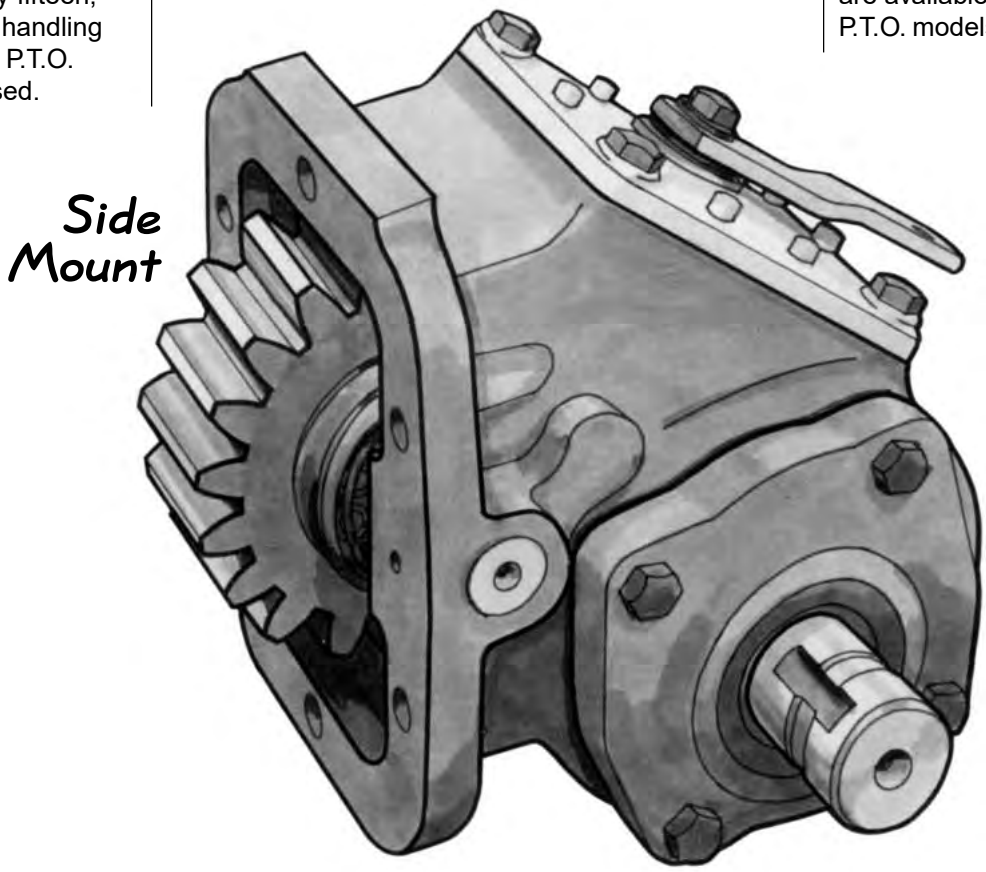

Answers:
1-T; 2-T; 3-F; 4-T; 5-T; 6-F; 7-T; 8-T; 9-F; 10-F; 11-T; 12-F; 13-F; 14-F; 15-F.

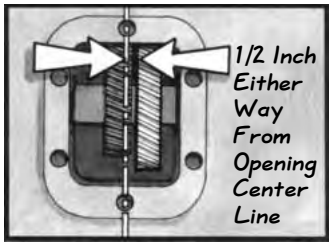

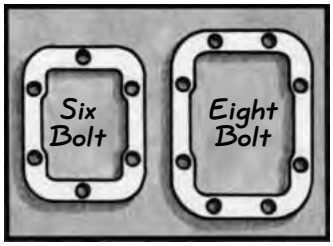

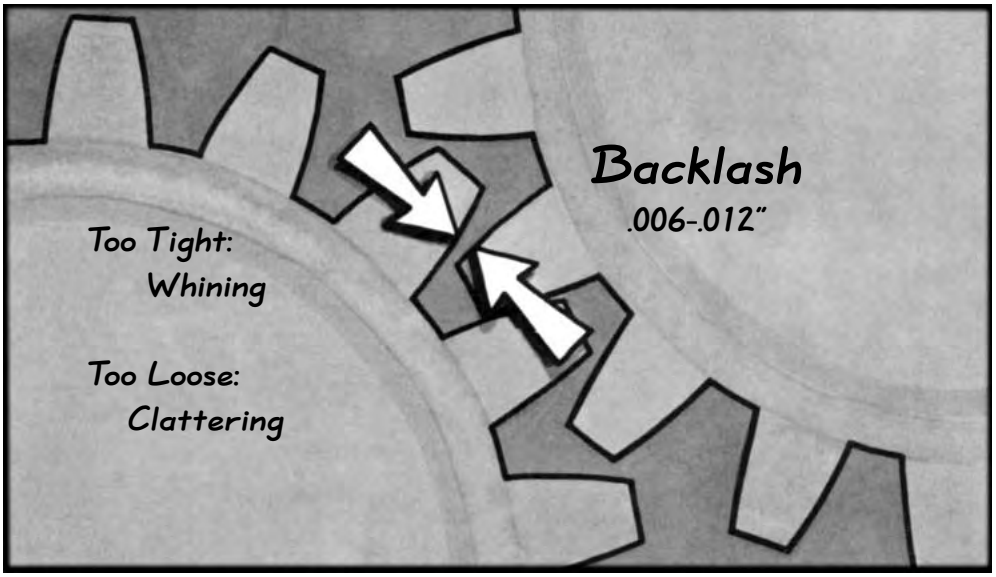

There are no secrets or special tricks to successfully installing a Chelsea P.T.O. All the necessary information can be found in the Owner's Manual accompanying each unit. Start at the standard P.T.O. opening, correct the backlash by use of gaskets, filler blocks and adapter assemblies, torque the bolts, and connect the proper shifter parts. It's just that simple. The value of the Owner's Manual is that it gives the installer the necessary detail to understand how a P.T.O. should be properly installed.

For example, the standard location of the P.T.O. drive gear is a half inch to the front, or rear, of the P.T.O. opening's vertical center line.

These openings are standard S.A.E. six-bolt or eight-bolt openings. If it is necessary to install a six-bolt P.T.O. in an eight-bolt opening, this may be accomplished by the use of an adapter plate in which case the P.T.O. is mounted to the adapter plate. Also available are the Chelsea 489 and 680 Series that offer six-bolt torque capabilities with a eight-bolt mounting pad and simplifies installation. Eight-bolt P.T.O.s however, should never be mounted by any means to a six-bolt opening.

Eight-bolt openings are available on many transmissions and permit the use of larger mating gears, thus providing greater torque handling possibilities. Eight-bolt mountings are usually desirable and should be used for heavy-duty and extra-heavy-duty applications. Side Mounted P.T.O.s are mounted directly to the transmission, separated only by a gasket, or gaskets. However, in some cases, to obtain a correct meshing of gears, other mounting parts such as filler blocks or adapter gear assemblies may be necessary.

Gaskets are available in either .010 or .020 inch thicknesses. A gasket must be used between all mounting surfaces to insure against loss of lubricating fluids. If filler blocks are used, a gasket must be inserted between each one. Sometimes, to provide for correct backlash, two or more gaskets may be required.

Backlash is the clearance needed between the meshing of gear teeth to permit a quiet, smooth operation. An assembly which is too tight will result in a "whining" noise. If it is too loose, the assembly will make a "clattering" sound. Both conditions are undesirable because they will result in loss of power, overheating, or excessive gear deterioration. A correct meshing of gears is obtained when like-gears operate with a backlash of from .006 to .012" clearance. Backlash should be checked with a dial indicator at the time of the installation.

NOTE: *In cooperation with the transmission manufacturers and Chelsea many automatic and some manual transmissions now use special gaskets which eliminate the need to check backlash on those units.*

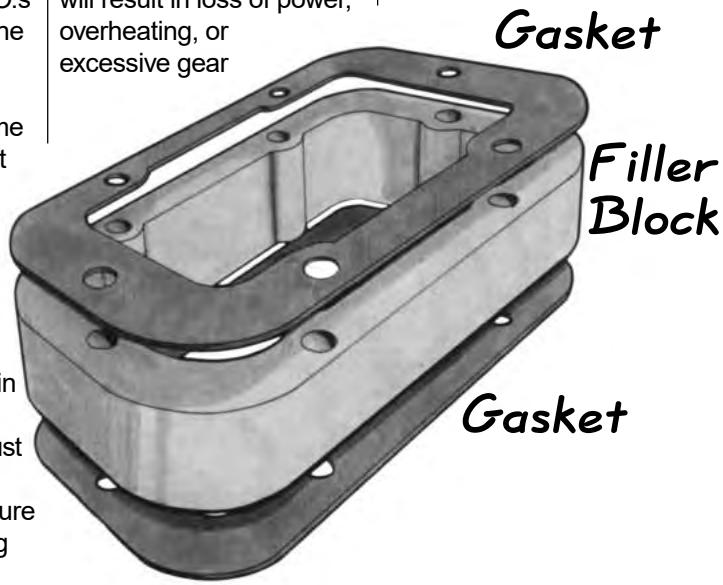

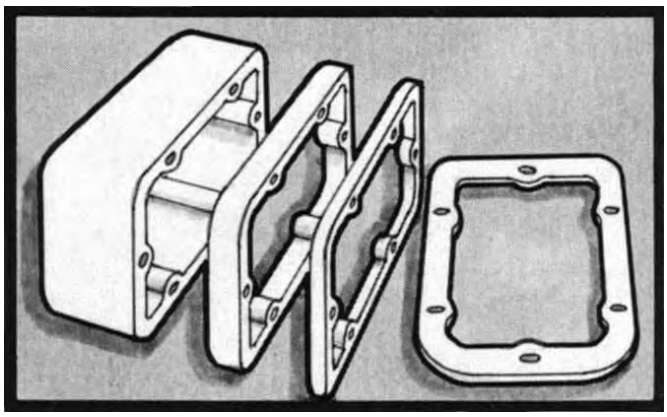

Filler blocks are available in various thicknesses and should be used when the distance between the mating gears requires their use. This is preferable to the use of a large number of gaskets and will prevent possible leakage. Therefore, do not stack more than four gaskets together.

An adapter gear is used when it is not possible to mount a P.T.O. with the input gear in direct mesh with the transmission drive gear. This unit resembles a filler block with a gear attached to the opening. The adapter gear picks up the power from the transmission gear and transfers it to the P.T.O. input gear. When such a unit is used, however, it must contain a gear construction which will mesh with both the P.T.O. and the transmission gears.

An adapter gear is often used to change the direction of the output shaft rotation in the P.T.O. Most adapter gears will not affect the output speed of the P.T.O. However, instead of using an adapter gear, it is sometimes possible to use a “deep mount” P.T.O. to accomplish the necessary mating of gears. A deep mount has a milled case to allow the input gear to extend a greater distance into the transmission case.

Installing a Chelsea® Sidemount P.T.O.

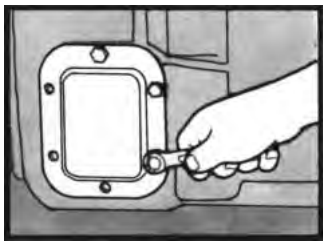

(For 6 or 8 Bolt Mount Applications)

Step 1. Drain the oil from the transmission and remove the P.T.O. aperture cover plate.

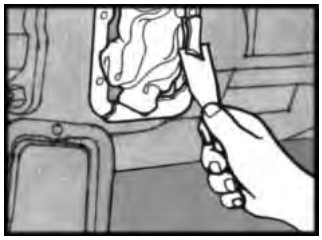

Step 2. Discard the cover plate and cover plate gasket. Then clean the aperture pad using a putty knife or wire brush.

NOTE: *Stuff a rag in the opening to prevent dirt from entering the transmission while you are cleaning it.*

Using your hand, rock the P.T.O. driver gear in the transmission, and the driven gear in the P.T.O. assembly. Rocking the gears provides you with one important piece of information: *It shows you the amount of backlash that has been designed into each. This is helpful in establishing the proper backlash when installing the P.T.O.*

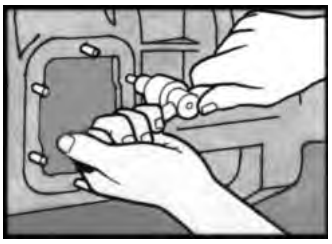

Step 3. Install the proper studs in the P.T.O. aperture using a stud driver. Where holes are tapped through the transmission case, use a sealant to prevent leaks.

NOTE: *Avoid contact of the sealant with automatic transmission fluid in automatics. Always check to be sure that the studs do not interfere with transmission gears.*

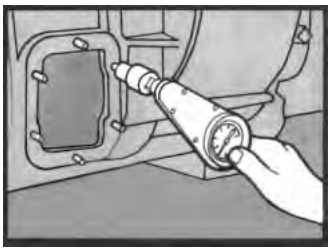

Tighten the studs securely and torque to 45-50 lbs. ft. (6.22-6.91 Kg. meters) for an eight-bolt, and 30-35 lbs. ft. (4.14-4.84 Kg. meters) for a six-bolt unit.

Parker Hannifin Corporation
Chelsea Products Division
Olive Branch, MS 38654 USA

Step 4. Place the correct number of gaskets over studs. Do not use sealant right away between gaskets because you may want to add or subtract gaskets to obtain proper backlash. when mounting any P.T.O., use gaskets between all mounting surfaces but do not stack more than 4 gaskets together. For a transmission with a standard mounting depth, usually only one thick (.020 [50mm]) gasket will be required. At least one gasket must always be used on either side of filler blocks, adapter assemblies, or adapter plates. More gaskets may be required in order to establish proper backlash.

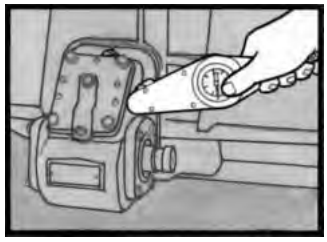

Step 5. Secure the P.T.O. to the transmission. Use self locking nuts provided with the P.T.O.

The 221 Series must always have a copper washer under its one cap-screw head that goes through the inside of the housing. Fasten the P.T.O. to the transmission: torque six-bolt P.T.O.s to 30-35 lbs. ft. (4.14-4.84 kg. meters) and eight-bolt P.T.O.s to 45-50 lbs. ft. (6.22-6.91 kg. meters). Refer to the Owner's Manual for steps to check for proper backlash.

After assembly, refill transmission with oil and briefly operate the P.T.O. and check for noises resulting from incorrect mounting as well as the proper positioning of the sliding gear. If a whining sound is heard, gaskets should be added to provide more gear clearance. If a clattering noise is heard, it is necessary to remove one or more gaskets to provide a tighter fit. This pre-testing is important as many P.T.O. failures are due to faulty installation. If there is any doubt about the installation, always check the Owner's Manual. Also, remember that the use of a P.T.O. requires the addition of from one to two extra quarts of oil to the transmission, depending upon

the size of the P.T.O. You should anticipate a slight increase in P.T.O. noise level as the oil thins out at operating temperature. After the P.T.O. has been in operation for a period of time, check the torque of the mounting bolts and the general operation of the unit. Look for leaks or other problems that may have arisen. Correct them before serious damage occurs to either, or both, the P.T.O. and transmission.

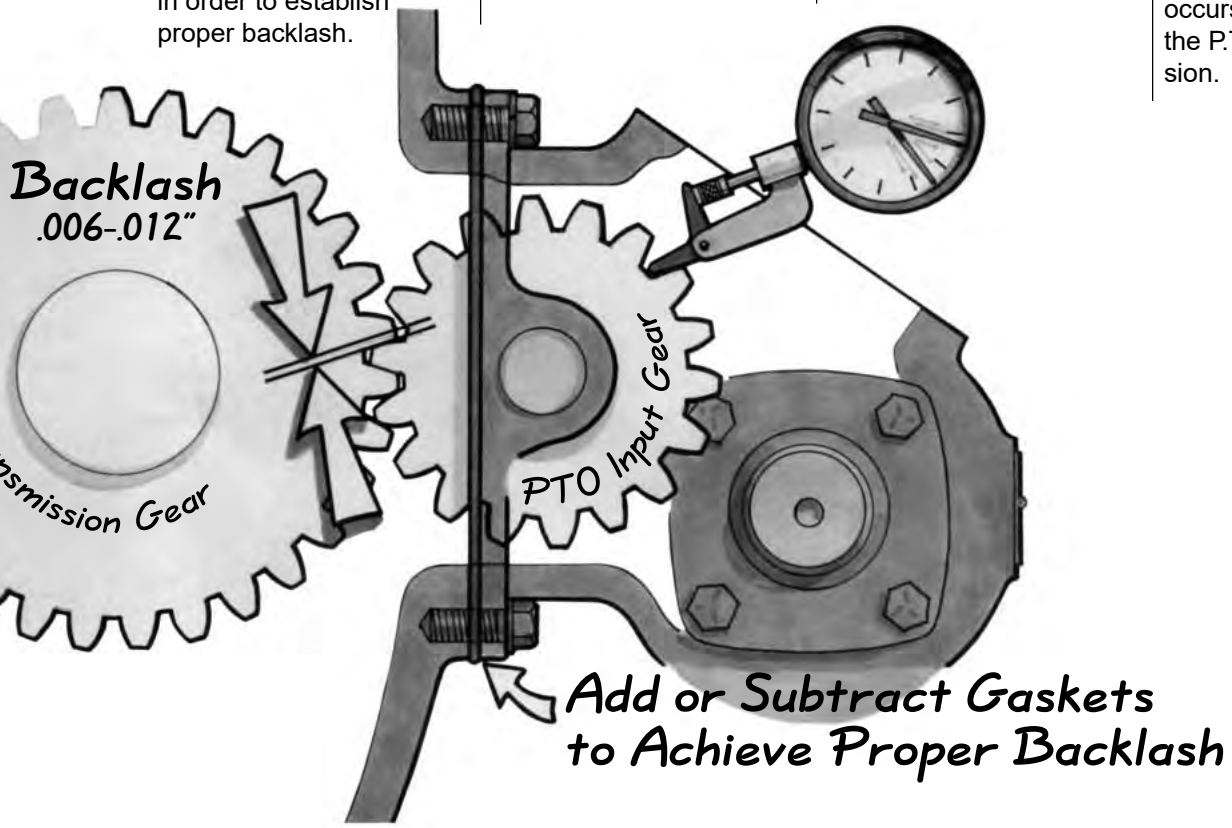

Parker Hannifin Corporation
Chelsea Products Division
Olive Branch, MS 38654 USA

Installation of Chelsea® Countershaft P.T.O.s

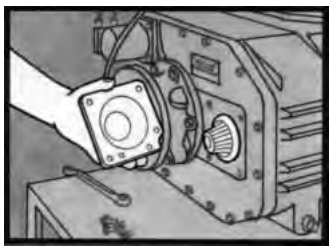

The basic installation of a Chelsea Countershaft P.T.O. is simple. First, remove the bearing cap that covers the extended countershaft at the rear of the transmission.

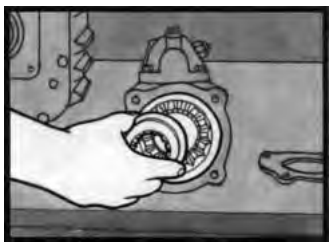

Then insert the clutch gear that's included in the installation package into the P.T.O.

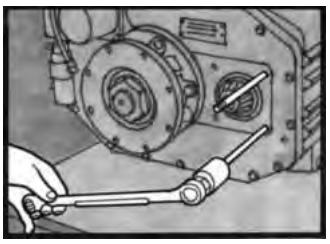

Next, (if you're working with a 540 unit) install the long studs in the back of the case.

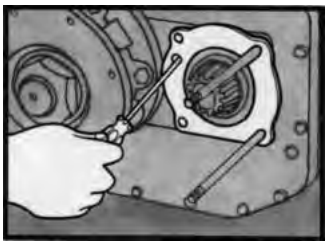

Then mount the new bearing cap and gaskets in the proper order over the shaft hole.

NOTE: *The lube holes must line up with the transmission holes as shown.*

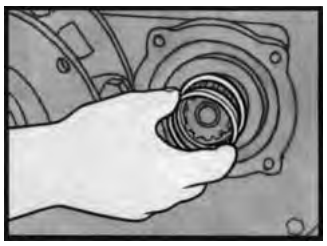

Install spring over countershaft extension.

NOTE: *Make sure spring is installed against the bearing of the transmission.*

Mount the unit on the countershaft and tighten the cap screws and stud bolts to the proper torque.

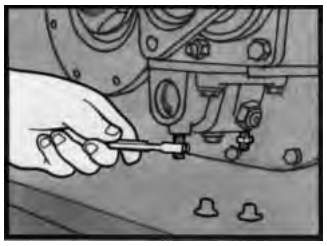

Install the two male connectors to the air shift cover and plumb the system. (Refer to **Owner's Manual** for additional detail.)

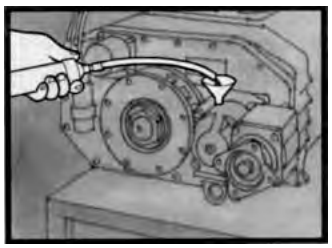

Next, the shift valve can be installed in the cab using the template and instructions found in the Installation Manual. Add the prescribed amount of lubrication and run the unit for a few minutes to check for leaks. Then check the lube level from the transmission oil reservoir.

The installation and servicing of the Countershaft P.T.O. is simplified when one uses the information available in the **Chelsea Countershaft Application and Installation Manual.** Use this booklet to answer questions concerning proper P.T.O. operations and installation.

Parker Hannifin Corporation
Chelsea Products Division
Olive Branch, MS 38654 USA

Besides direct mounting a pump to a P.T.O., you can transfer power by means of a P.T.O. driveshaft. A P.T.O. driveshaft transmits torque from the P.T.O. output shaft to the input shaft of the driven accessory. The driveshaft must be capable of transmitting the maximum torque and R.P.M. required by the accessory, plus allowing for any shock loads which may develop.

NOTE: *Chelsea strongly recommends the use of pump supports (Support Brackets) in all applications. P.T.O. warranty will be void if a pump bracket is not used when: 1) The combined weight of pump, fittings and hose exceed 40 pounds. 2) The combined length of the P.T.O. and pump is 18 inches or more from the P.T.O. centerline to the end of the pump.*

The P.T.O. driveshaft operates through constantly changing relative angles between P.T.O. and driven accessory, therefore the length of the driveshaft must be capable of changing while transmitting torque. This length change, commonly called "slip movement," is caused by movement of the powertrain due to torque reactions and chassis deflections. Since most P.T.O. driveshaft applications are for strictly intermittent service, a precisely balanced shaft is rarely used. The most common design used in these intermittent service applications are of solid shaft design using hex, square, or round bar-stock.

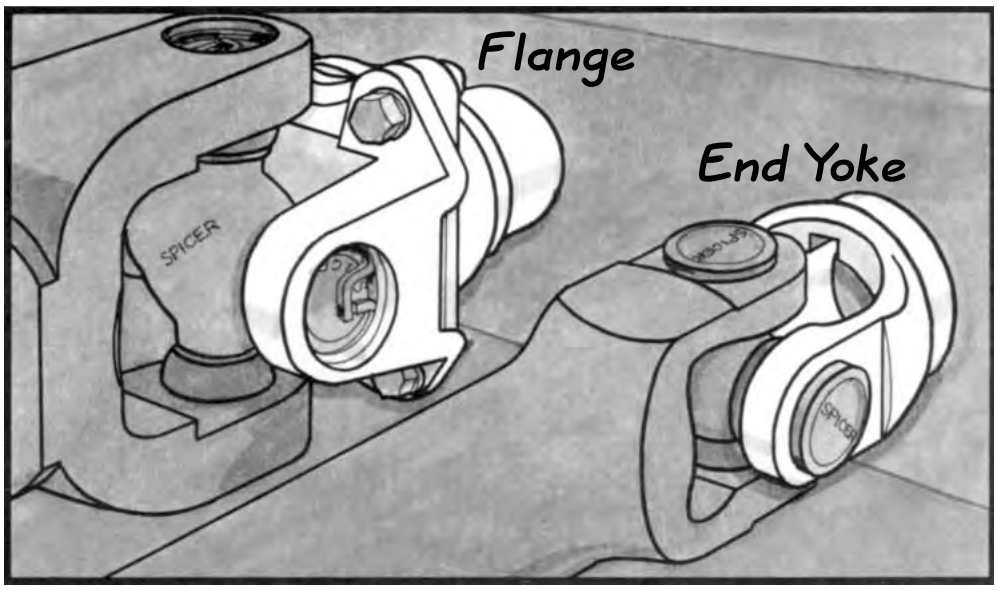

A bar-stock constructed P.T.O. driveshaft is primarily aimed at low-torque applications operating at less than 1200 R.P.M. P.T.O. driveshafts requiring additional torque or R.P.M. should be tubular construction. With tubular construction, the 100 Series driveshafts are capable of running up to 4000 R.P.M., and Spicer® 1280-1310 series are capable of running up to 6000 R.P.M.

P.T.O. driveshafts are available with end fittings of the end yoke or flange construction. Driveshafts utilizing the flange type construction would be best suited for an application where the complete driveshaft would be removed often. This can easily be accomplished by removing bolts, nuts, and washers used to connect the flange yoke and companion flange. Except where power is being transmitted wholly by gears, shafts, or pulleys, some type of universal joint is recommended. Other applications that use P.T.O.-type driveshafts are off-road construction machinery.

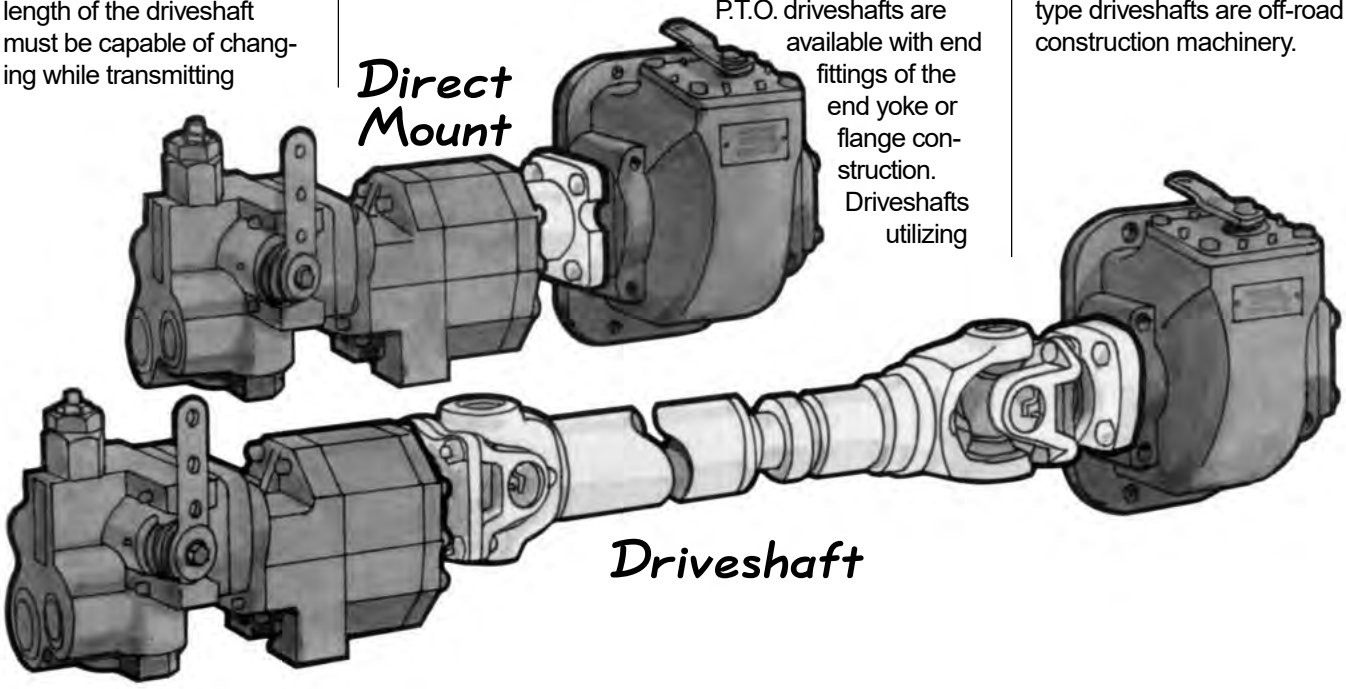

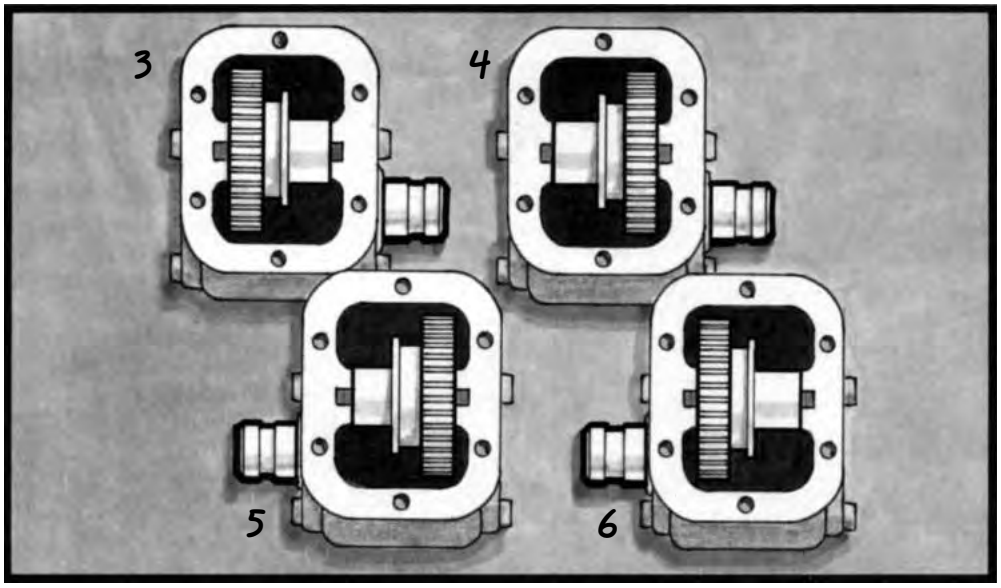

P.T.O. Conversion

Occasionally it becomes necessary to change the assembly of a P.T.O. for one or more of the following reasons:

- To change the position on a transmission from right side to left side, or vice versa.
- To change the P.T.O. input gear to one that will mate with the transmission drive gear.
- To change the direction of the output shaft from pointing towards the rear of the vehicle to pointing towards the front, or vice versa.
- To change the standard output shaft arrangement to a direct mounting pump arrangement.

When working with assembly arrangements, always have an understanding of the position of the gears and shafts in the four basic arrangements. The only difference between assembly arrangements are the positions of the gears within the housing and the side of the housing where the output shaft protrudes.

The #3 arrangement, for example, is known as the "standard mount" when mounted on the right side of a transmission with the drive gear one-half inch to the front of the vertical center line of the opening. The input gear is to the front and the output shaft is to the rear. Should you want a "standard mount" on the left side of the transmission with the drive one-half inch to the front of the vertical center line of the opening, assembly arrangement #5 would be used.

Changing the assembly arrangements of any P.T.O. is essentially a process of first removing the input gear and changing its position on the idler shaft. Then, remove the output gear and shaft and change the position of that gear. For more detailed information concerning disassembly and reassembly of a P.T.O., refer to the **Chelsea Service Manual** on the particular unit.

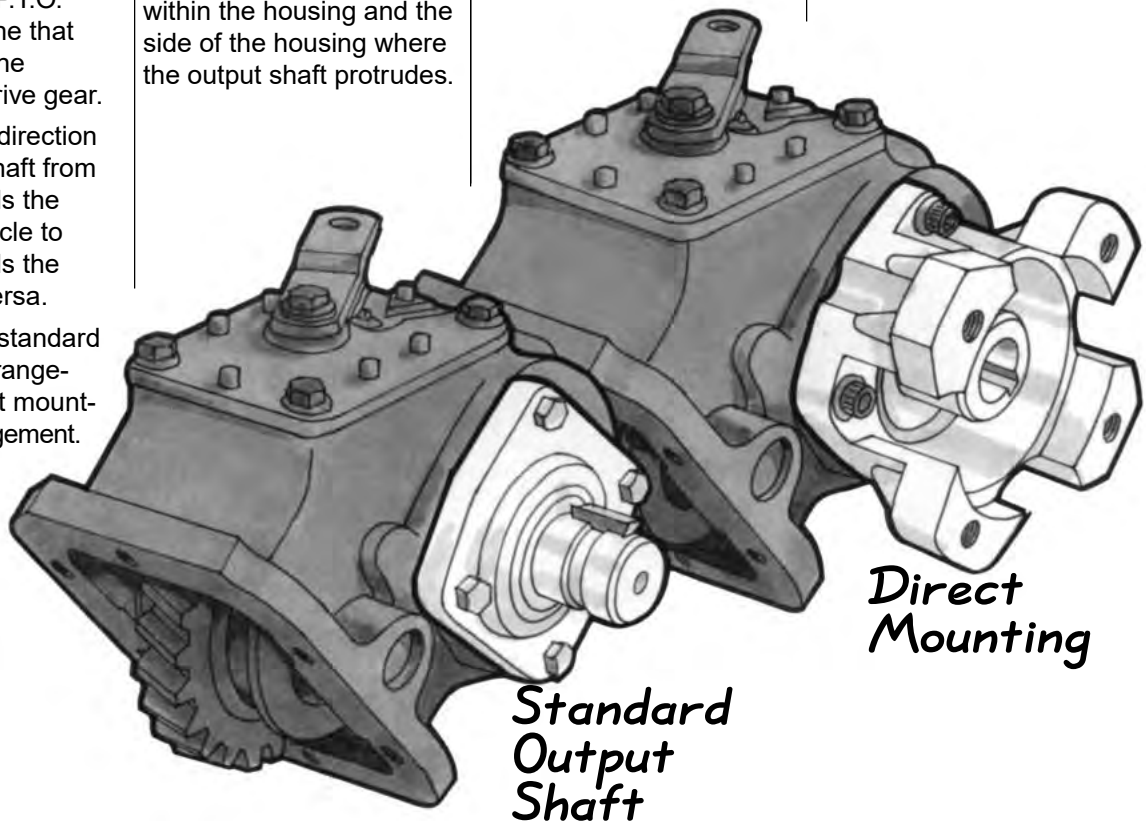

True or False

____ 1. There are no standard P.T.O. openings on most transmissions.

____ 2. The standard location of the P.T.O. drive gear is a half-inch to the front or rear of the P.T.O. opening.

____ 3. A six-bolt P.T.O. can be installed in an eight-bolt P.T.O. opening by using an adapter plate.

____ 4. Eight-bolt P.T.O.s are used only in low-torque and light-duty applications.

____ 5. Filler blocks and adapter gear assemblies eliminate the need for gaskets when mounting a P.T.O.

____ 6. Backlash is the clearance needed between the meshing of gears to permit a quiet, smooth operation.

____ 7. A P.T.O. assembly that is too tight will make a “whining” sound after it is installed.

____ 8. The correct amount of backlash for a Side Mount P.T.O. installation is from .006 to .012 inches in clearance.

____ 9. If an adapter gear is used in a P.T.O. installation, it will not change the P.T.O.s direction of rotation.

____ 10. When installing a P.T.O., be sure the opening on the transmission is protected while the gasket is being removed.

____ 11. Copper gaskets are used to prevent rust under the capscrew heads.

____ 12. Avoid contact of any gasket sealant with the automatic transmission fluid in automatic transmissions.

____ 13. If a clattering noise is heard after a P.T.O. has been installed, add more gaskets until the noise is eliminated.

____ 14. After a P.T.O. has been installed, add extra oil to the transmission depending on the size of the P.T.O.

____ 15. The Chelsea Countershaft P.T.O. does not need to be adjusted for backlash during installation.

____ 16. All Chelsea Countershaft P.T.O.s are air shifted.

____ 17. If a P.T.O. driveshaft is used to transmit power from the P.T.O. to the driven device, it must contain sufficient “slip movement” to change length during operation.

____ 18. An imbalanced P.T.O. driveshaft can cause vibration in the driven equipment and the P.T.O.

____ 19. The 4 basic assembly arrangements affect the direction of the shaft and the position of the gears.

____ 20. The gear in a P.T.O. can be changed from spur to helical, or vice versa.

Answers:
1-F; 2-T; 3-T; 4-F; 5-F; 6-T; 7-T; 8-T; 9-F; 10-T; 11-F; 12-T; 13-F; 14-T; 15-T; 16-T; 17-T; 18-T; 19-T; 20-T.

Parker Hannifin Corporation
Chelsea Products Division
Olive Branch, MS 38654 USA

The Chelsea P.T.O. is designed and built to meet the rugged demands of the Mobile Equipment Industry. With proper use and maintenance, the Chelsea P.T.O. will provide a long service life, both on-highway and off. Yet, if a problem does arise, it is important to diagnose its causes and correct it *at once.*

The first place to look when troubleshooting a P.T.O. failure is in the application itself. Repeated or premature failure may be a sign of an incorrect application. This can be discovered by using the **Chelsea HY25-3001/US General Information Catalog** or **HY25-3000/US Applications Catalog.** Check to see if the proper P.T.O. was specified for the transmission, then find out if the torque handling capabilities of the P.T.O. are satisfactory for the job being done. A P.T.O. works best when it is properly specified for the transmission and job requirement.

If the P.T.O. was correctly specified and then failed prematurely, there are two likely causes: improper installation and/or operator misuse. These are tough problems because they involve people as well as product. An improperly installed P.T.O. can normally be identified immediately by the sound it makes. It will "whine" if installed to tightly, or "clatter" if it is installed to loosely. Sometimes, the vehicle itself may contribute enough noise to mask the sound of the P.T.O. and one may not notice the problem.

If a problem is allowed to continue, then damage to the P.T.O. will result. A unit that has been mounted to loosely could result in broken gear teeth. A unit that is mounted too tightly could result in premature wear to the gear teeth. Also, when a P.T.O. is installed without enough filler blocks, spacers, or gaskets between it and the transmission, a deep wear pattern will occur on the gear teeth. These patterns will lead to fatigue and early tooth failure. To help prevent this from occurring, always test the P.T.O. for noise just after it is installed.

Whatever the reason for a P.T.O. failure, there will be confusion over who, or what, is at fault. More than likely the product will be blamed. Although the P.T.O. cannot defend itself, its failed parts will tell a story.

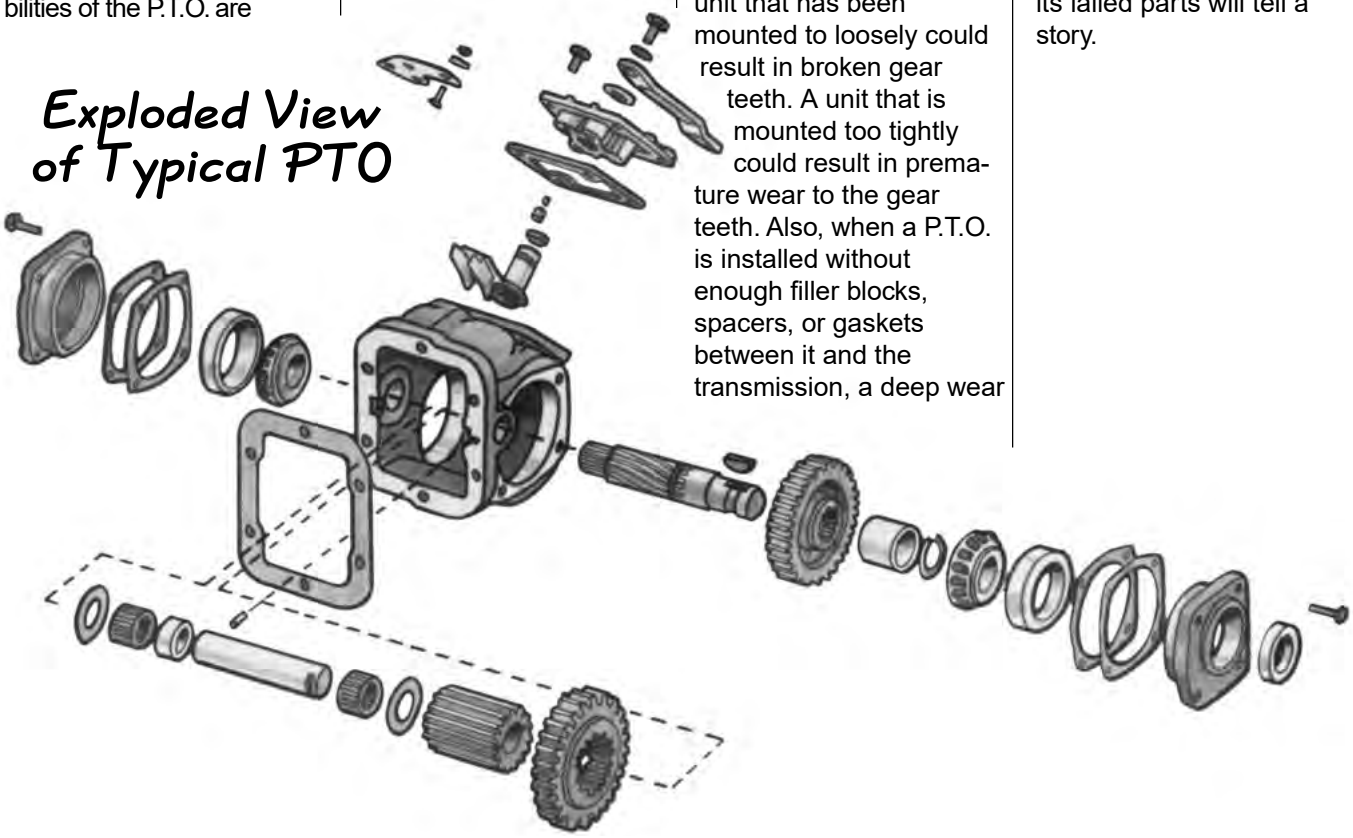

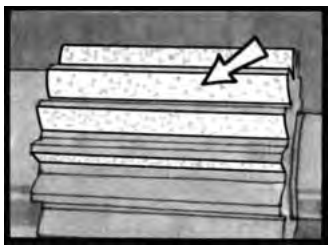

The first parts to inspect should be the gears. Check the surface of the gear teeth for signs of pitting . . . pitting is a normal wear pattern in most cases. However, contaminants in the oil or an installation that is too tight will cause severe pitting.

Once pitting of the gear surfaces has begun, there is nothing that can stop it. Severe pitting will eventually lead to gear tooth failure, therefore the damaged gear should be replaced when a P.T.O. is repaired or rebuilt.

Sometimes a gear will chip a tooth because of mishandling or improper shifting. Even though a P.T.O. may continue to run with a chipped tooth, the damaged gear should be replaced immediately. It will damage the other teeth it comes in contact with during operation, not to mention the possible damage which could result from the loose chip. If the problem is allowed to continue, then failure to other parts in the P.T.O. or transmission could result.

Another possible problem during vehicle operation is “shock load.” This occurs when the torque demands on a P.T.O. are suddenly greater than it was designed to take. “Shock load” could be caused by torque overloads, improper shifting, equipment failure, or excessive loads over a short period of time. If this happens, the P.T.O. is likely to fail immediately. The vehicle operator may not even be aware of the reason for the P.T.O. failure.

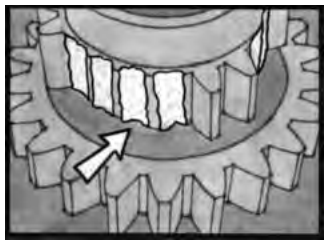

Worn gears can easily be affected by “shock load.” If the worn gears are not replaced, they can eventually lead to broken gear teeth. This is the most severe form of P.T.O. failure. Worn or damaged gears are likely to break because of their reduced load carrying capacity. To prevent the possibility of broken gear teeth, always inspect auxiliary equipment for possible freeze-up. Also, recheck P.T.O. application, operating conditions and P.T.O. installation.

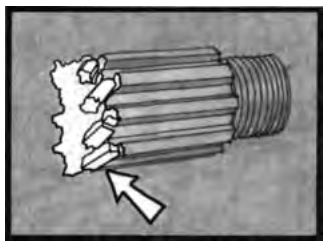

P.T.O. shafts are also vulnerable to operating abuse. If the shaft break is irregular, this usually indicates a torsional overload. Bending fatigue failure usually shows up as a smooth, flat break. To correct a P.T.O. shaft problem replace the failed shaft and check the speed and operating angle of the universal joint. Also, make sure the P.T.O. driveshaft is properly phased, (yokes in-line with each other). If a driveline is improperly installed it will cause vibration, which may lead to P.T.O. driveshaft or driven equipment problems.

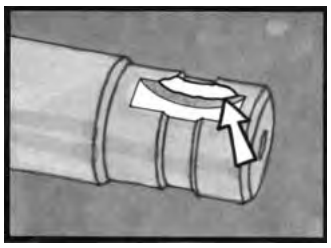

When inspecting a P.T.O. output shaft, always inspect the keyway. Sometimes a P.T.O. will fail because of a displaced keyway on the shaft caused by a loose fitting yoke or equipment-freeze-up. Proper maintenance on auxiliary equipment and replacing a worn yoke and/or P.T.O. driven shaft will prevent this problem.

Deep Mesh Pattern Caused by Improper Backlash Adjustment

Parker Hannifin Corporation
Chelsea Products Division
Olive Branch, MS 38654 USA

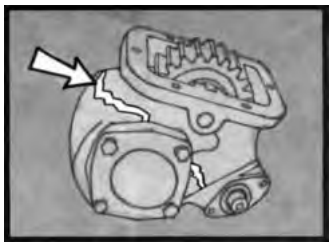

One of the most serious problems a P.T.O. can suffer is a cracked case. This condition can lead to oil loss and eventual transmission failure. Improper installation, poorly torqued bolts, or an unsupported direct mount pump can cause such a problem. A P.T.O. case can also be damaged by foreign objects meshing between the gear teeth, severe shock load, or even hitting an obstacle in the road.

Prevention is the best cure for P.T.O. case damage. Therefore, always torque the P.T.O. flange bolts in sequence and the proper specifications. Also, be sure to check the weight of the direct mount pump and, if it is over forty pounds, make a support bracket for it.

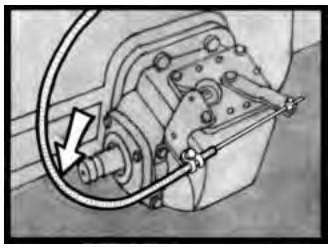

Shifting problems are sometimes a complaint an operator will have about his P.T.O. A P.T.O. that is hard to shift may be caused by a tight bend in the shifter cable, poor leverage, a gear that is installed backwards, or too tight of an installation. Many of these problems can be solved by inspecting the P.T.O. installation and making the proper adjustments regarding cable length, gear position, or shift lever.

Remember, a lever-operated shift linkage should not be connected to a wire shift cover. The mechanical advantage of the lever is often too great for the wire shift cover and could severely damage it. Also inversely, don't use a cable with a lever shift cover. The cable isn't capable of transmitting the force necessary to shift a lever mechanism.

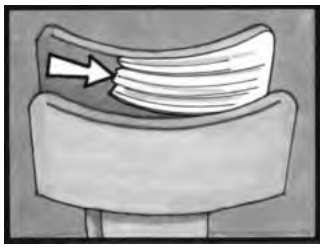

Most shifting complaints are caused by improper shifting procedure or incorrect linkage installation. Both of these situations will cause premature wear on the shift pad or fork and the shift rod or rail. To prevent this premature wear, avoid overshifting or undershifting the P.T.O. Overshifting causes the shifter fork to press against a P.T.O. gear during operation. This results in unnecessary friction and wear.

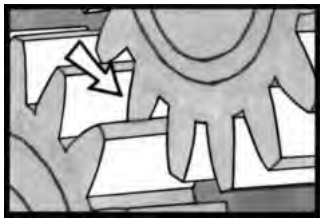

Undershifting allows incomplete gear tooth contact with the driver gear. This means only part of the tooth width is transmitting the torque and R.P.M. during P.T.O. operation. This situation can lead to gear failure or it could cause the P.T.O. to jump out of gear. These two problems can be overcome by checking linkage adjustments and proper operator training.

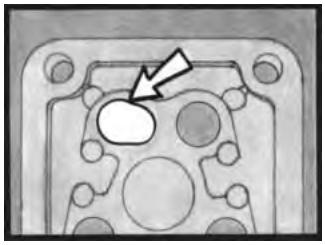

Shifting problems can also be caused by a worn or elongated shifter poppet hole. This causes the P.T.O. to jump out of gear and the parts in the shifter assembly to break or become loose. If this happens, replace those parts that are worn.

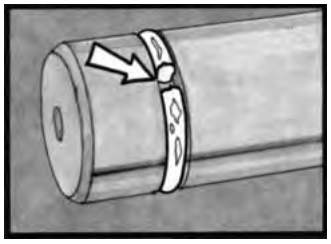

Seals and O-Rings may cause special problems in P.T.O. operations. Improper installation or heat build-up can cause O-Rings and seals to fail prematurely. Once seals or O-Rings fail, they should be replaced. The proper procedure for installing these parts is to lubricate them first so they will easily slide on the shaft.

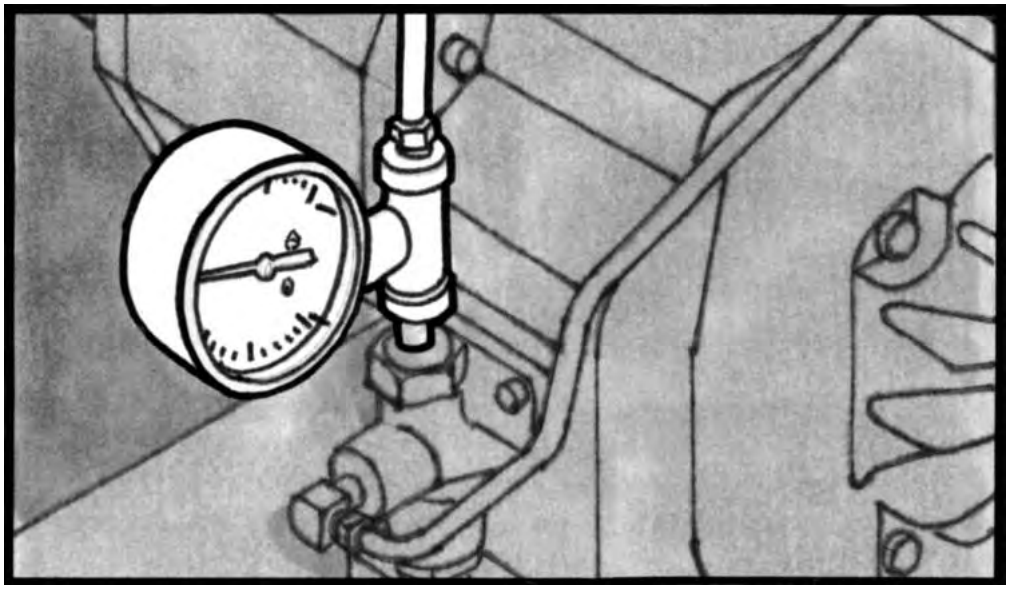

Remember, when troubleshooting any clutch-operated P.T.O., carefully inspect all components for wear or damage. Burnt clutch plates, welded clutch pack, or a burnt driving hub are three easily identifiable conditions that lend themselves to failure analysis. Generally, incorrect air/oil pressure, lack of lubrication, or excessive heat build-up will directly contribute to poor air clutch operation and eventual failure.

A sure sign of potential trouble with a clutch operated P.T.O. is erratic operation. Check the air system for the proper pressure and inspect it for cleanliness. A dirty or contaminated system will affect the entire P.T.O. operation, so inspect it periodically and change the oil at the interval specified in the Chelsea Owner's Manual to insure that it is always clean and free of abrasives.

Chelsea P.T.O.s are designed and built to match a vehicle's transmission. The gear's of a P.T.O. are of the same quality as the transmission's gears. Successful operation depends on proper specification and installation. Always consult your **Chelsea Applications Guide** and **Installation Manual** when working with Chelsea P.T.O.s. doing this will prevent serious P.T.O. problems.

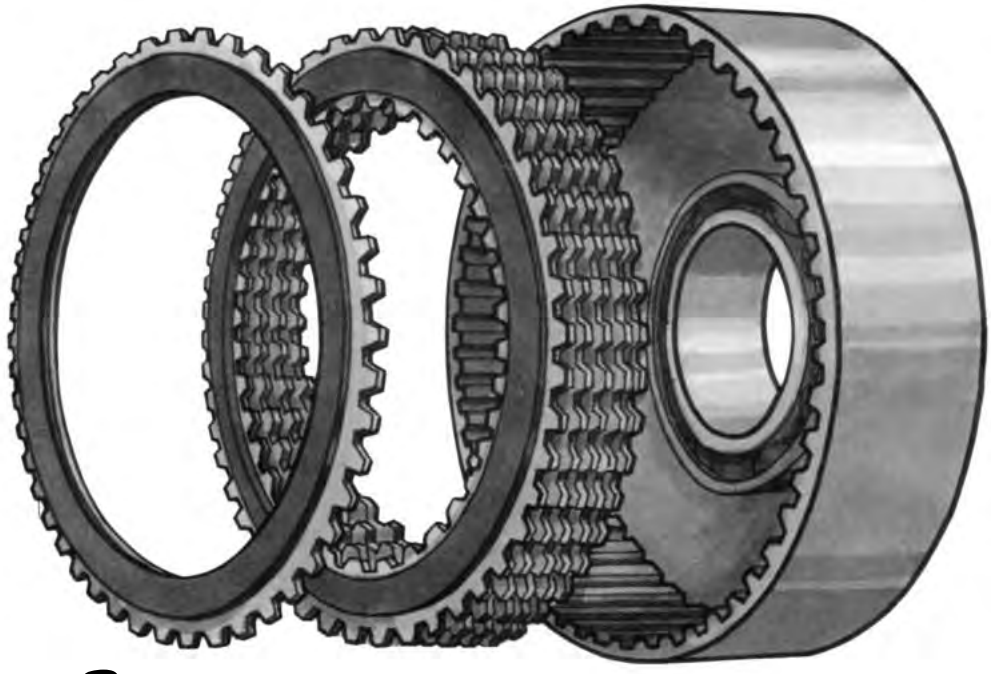

Burnt Clutch Plates?

Welded Clutch Pack?

Burnt Driving Hub?

True or False

____ 1. A correctly specified P.T.O. usually fails because of improper installation or operator abuse.

____ 2. An improperly installed P.T.O. can usually be identified by the sound it makes.

____ 3. A unit that is mounted too loosely could result in broken gear teeth and one that is too tight could result in premature gear wear.

____ 4. The best way to test for P.T.O. noise is to ask the vehicle operator if he hears anything unusual when he uses a P.T.O.

____ 5. Pitting of gear teeth is usually an abnormal wear pattern.

____ 6. Severe pitting of gear teeth will eventually lead to gear tooth failure.

____ 7. A damaged gear should be replaced immediately or it will damage other gears in a P.T.O. or transmission.

____ 8. “Shock load” occurs when the R.P.M. demands on a P.T.O. are greater than the unit was designed to take.

____ 9. P.T.O. shafts are invulnerable to operator abuse because they are stronger than P.T.O. gears.

____ 10. The speed and operating angle of a P.T.O. shaft will affect its phasing and cause the shaft to become unbalanced.

____ 11. Always use wire locking stud kits on bottom mounted P.T.O.s to prevent them from coming loose.

____ 12. If a direct mount pump is over forty pounds, use copper washers on the flange bolts to prevent leaks.

____ 13. Never connect a lever-operated linkage to a wire-shift cover of a P.T.O.

____ 14. Overshifting a P.T.O. causes the shifter fork to press against a P.T.O. gear during operation.

____ 15. A worn shifter poppet hole can cause a P.T.O. to jump out of gear.

____ 16. Undershifting a P.T.O. allows incomplete gear tooth contact with the driven gear.

____ 17. When checking a P.T.O. for vibration, always remove the driveline first, and run the unit before inspecting it.

____ 18. Erratic operation of an air clutch P.T.O. is usually a sign of age in the P.T.O.

____ 19. Excessive heat build-up will have little effect on an air clutch operated P.T.O.

____ 20. The gears of a P.T.O. are of the same quality as a vehicle’s transmission gears.

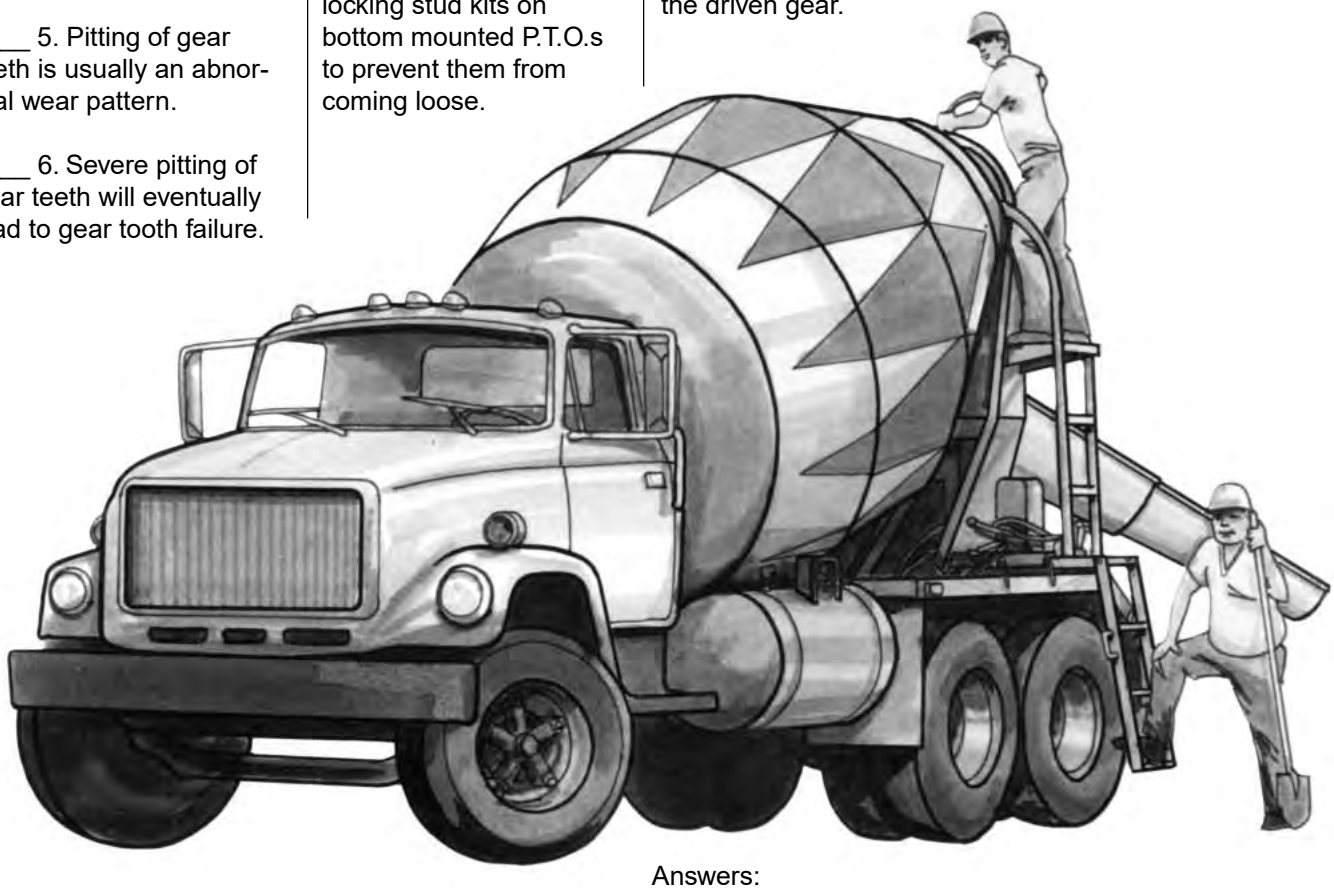

Answers:
1-T; 2-T; 3-T; 4-F; 5-F; 6-T; 7-T; 8-F; 9-F; 10- F; 11-T; 12-F; 13-T; 14-T; 15-T; 16-T; 17-T; 18-F; 19-F; 20-T.

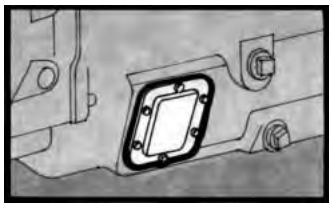

Aperture—Standard S.A.E. size opening on either side of the transmission which permits the installation of a Power Take-Off. May be either six or eight-bolt opening.

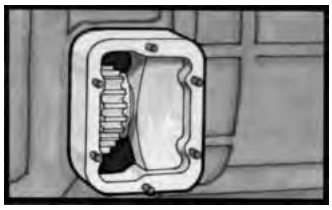

Adapter Gear—A single gear assembly which transmits torque between the transmission output gear and the P.T.O. input gear. Used when the distance between gears is too great to permit direct meshing, or to reverse P.T.O. rotation.

Assembly Arrangement— Refers to the location of the output shaft in relation to the gear. The preferred arrangement is with the output shaft to the rear.

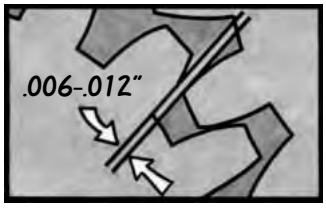

Backlash—clearance needed between the meshing of two gears to permit quiet, smooth operation. Recommended distance is .006 to .012." This is checked at pitch line.

Constant Mesh—Relation of two or more gears which always rotate in continual contact with each other.

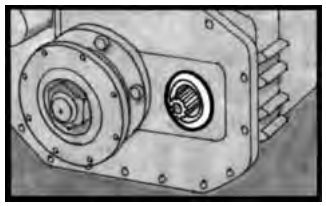

Counter Shaft—Secondary shaft in the transmission on which the P.T.O. drive gear frequently rotates.

Deep Mount—P.T.O. whose design permits its input gear to extend further into the transmission case to permit direct contact with the transmission output gear.

Engine Speed—Revolutions per minute of engine crankshaft which determines the speed available to the transmission or P.T.O.

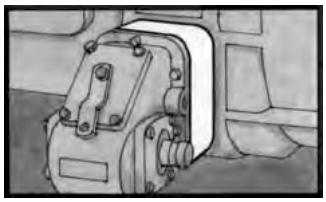

Filler Block—Fiber or metal plate of various thicknesses, assembled between the transmission and the P.T.O. for the purpose of extending the distance between drive and input gears to permit proper meshing.

Gear Ratio—The relationship of the number of teeth on the output gear to those on the input gear. For example, a gear of 45 teeth driven by one containing 15 teeth would provide a ratio of 3:1. Hence, a gear of 15 teeth driven by one containing 45 teeth would have a gear ratio of 1:3.

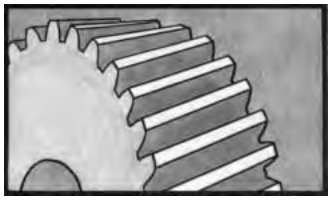

Helical Gear—A gear whose teeth are cut on an angle diagonally across the gear either with a right or left-hand slant. In order for helical gears to mate, one must slant to the right. . . the other to the left.

Horsepower—A measure of the capacity for doing work per unit of time. One horsepower is the energy required to lift 550 lbs., one foot in one second.

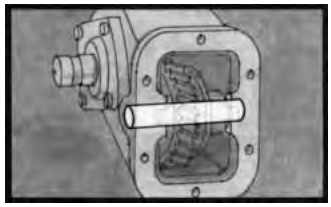

Idler Shaft—Normally the shaft that the input gear rotates on. Transmits power to the output gear and shaft.

Intermittent Operation—Normally a stop-and-go operation, such as five minutes on/fifteen minutes off, ten minutes on/30 minutes off. If heat builds up through repeated activity (through repeated cycling operations or high loads), the activity ceases to become intermittent and would then be classified as **continuous operation.**

Parker Hannifin Corporation
Chelsea Products Division
Olive Branch, MS 38654 USA

Input Speed—Revolutions per minute which the transmission output gear is capable of delivering to the P.T.O. input gear.

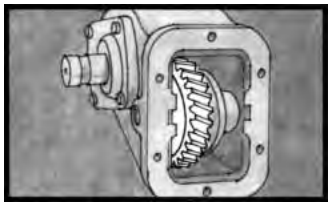

Input Gear—The P.T.O. gear first accepting the torque from the transmission output gear.

Mainshaft—The output shaft of the transmission that sends power to the driven unit, such as a rear axle.

Output Shaft—The shaft transmitting the torque from the P.T.O. to the device or unit which it operates, i.e., hydraulic pump, winch, etc.

Output Gear—The driving gear which activates the output shaft.

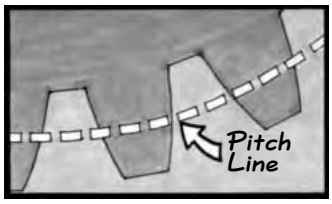

Pitch Line—The point on the gear tooth midway between the base of the tooth and the tip of the tooth.

Pitch (Gear)—The measure of the size of the gear teeth determined by the number of teeth in a given area measured at the pitch line. P.T.O. gear pitch is normally classified as 5, 6 or 7-pitch.

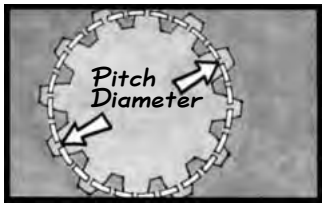

Pitch Diameter—the distance across the center of the gear measured from the pitch line of one tooth to the pitch line of the tooth directly opposite that tooth.

Pitch Line Velocity—the speed of rotation in feet per minute of a gear measured at the pitch line.

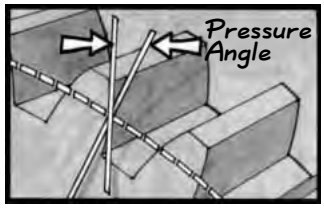

Pressure Angle— The angle formed, measured in degrees, by a line drawn perpendicular to the pitch line, and a line drawn from the same point on the pitch line tangent to the tooth profile.

Power Take-Off—A gear box attached to a transmission, receiving its power through that transmission for the purpose of transmitting that power to another mechanical or hydraulic device, according to the speed and torque required to operate the device.

Spur Gear—A gear whose teeth are cut straight across the face of the gear.

Standard Assembly Arrangement—Output shaft towards the rear of the vehicle and below the P.T.O.s centerline.

Torque—Effort required to perform a twisting or turning motion, often referred to as the force necessary to overcome resistance.

Transmission—A gear box which receives its power from an engine and which operates as a torque multiplier for the purpose of regulating speed and applying torque as required.

Abbreviations

lbs. ft.—Pounds Feet. Torque force developed or required to overcome resistance.

fpm—Feet per minute.
gpm—Gallons per minute.
hp—Horsepower.
I.D.—Inside diameter.
O.D.—Outside diameter.
plv—Pitch line velocity.
p.s.i.—Pounds per square inch (pressure)
rpm—Revolutions per minute
S.A.E.—Society of Automotive Engineers.

Notes

Parker Hannifin Corporation
Chelsea Products Division
Olive Branch, MS 38654 USA

Notes

Parker Hannifin Corporation
Chelsea Products Division
Olive Branch, MS 38654 USA

Notes

Parker Hannifin Corporation
Chelsea Products Division
Olive Branch, MS 38654 USA

Parker Hannifin Corporation

Chelsea Products Division
8225 Hacks Cross Rd • Olive Branch, MS • 38654
Phone (662) 895-1011 • Fax (662) 895-1019
www.parker.com/chelsea

Bulletin HY25-0063-B1/US 06/02

© Copyright 2002, Parker Hannifin Corporation, All Rights Reserved